178 / RL

SERVICE MANUAL

With price

ELECTRONIC KEYBOARD

Casiotone 403 (MX-25)
Casiotone 101 (MX-24)

AUG. 1981

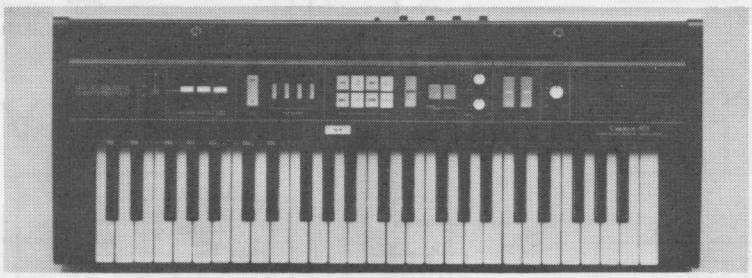

*Note: The sections shown in parentheses are only for the Model 403.

CASIO®

403 Main I

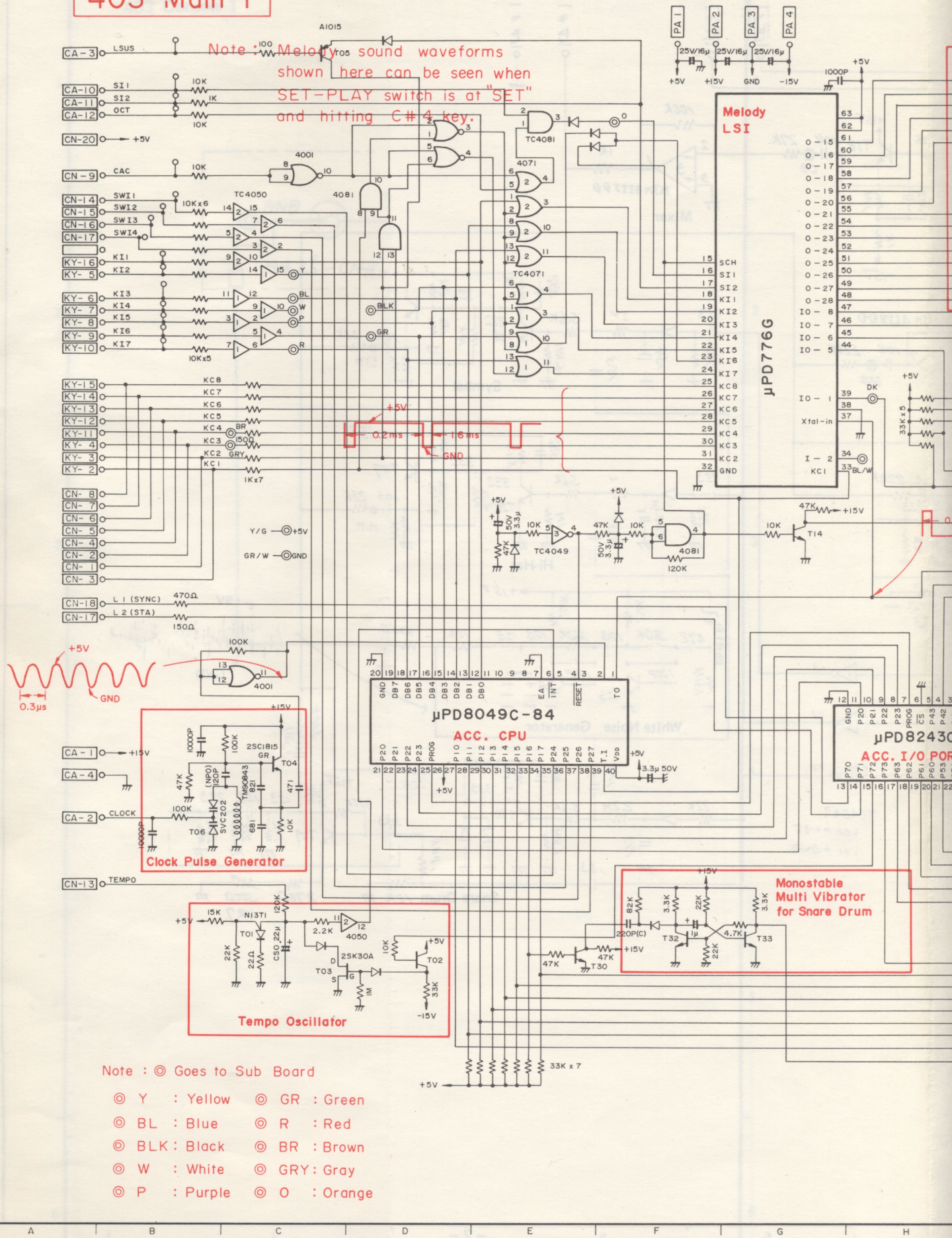
Note : Melody sound waveforms shown here can be seen when SET-PLAY switch is at "SET" and hitting C# 4 key.
Melody LSI
μPD776G
μPD8049C-84
ACC. CPU
μPD8243C
ACC. I/O PORT
Clock Pulse Generator
Tempo Oscillator
Monostable Multi Vibrator for Snare Drum
Note : ◎ Goes to Sub Board
◎ Y : Yellow ◎ GR : Green
◎ BL : Blue ◎ R : Red
◎ BLK : Black ◎ BR : Brown
◎ W : White ◎ GRY : Gray
◎ P : Purple ◎ O : Orange

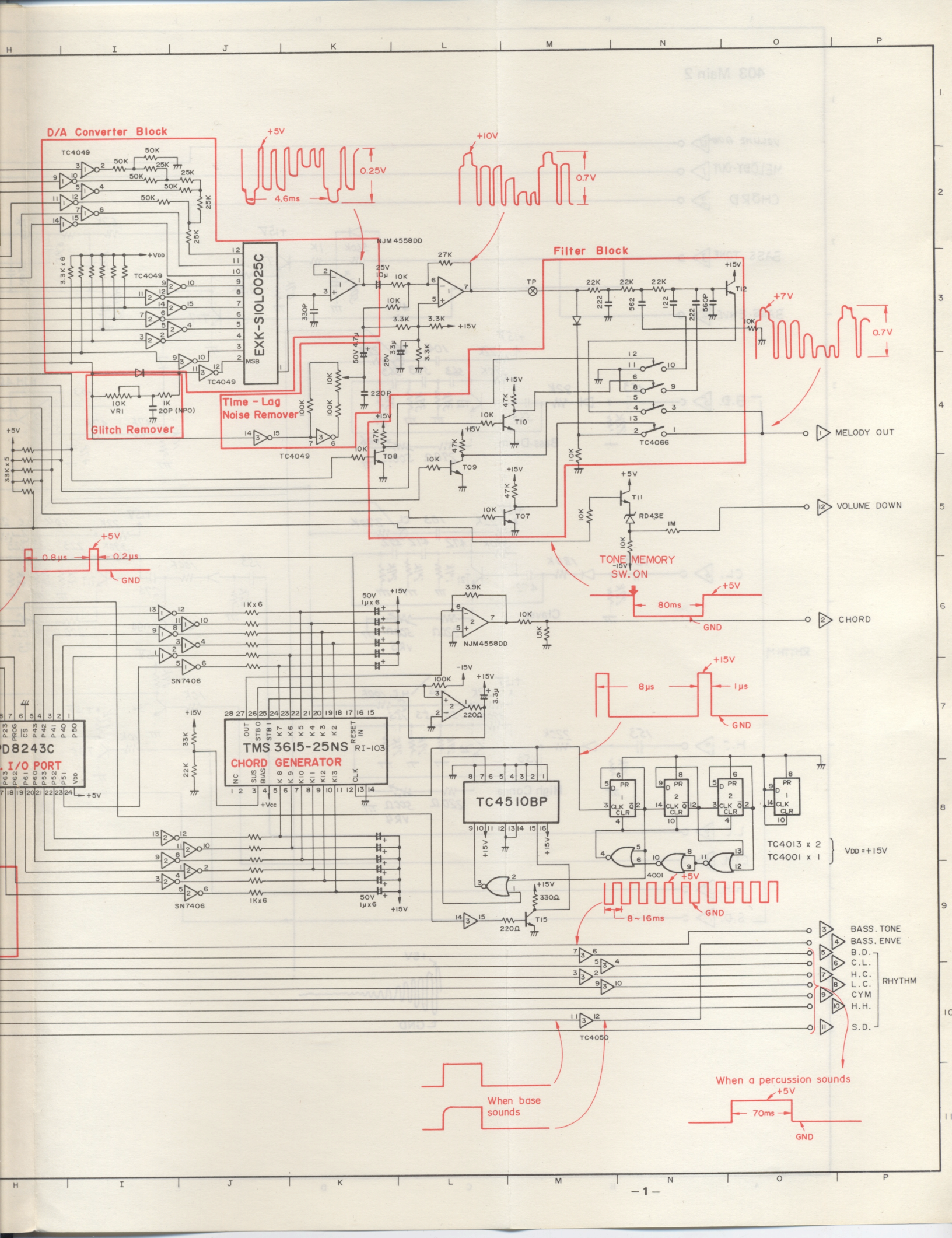
D/A Converter Block
TC4049
EXK-S10L0025C
MSB
NJM4558DD
Filter Block
Time - Lag
Noise Remover
Glitch Remover
TC4066
MELODY OUT
VOLUME DOWN
TONE MEMORY
SW. ON
CHORD
SN7406
TMS 3615-25NS
RI-103
CHORD GENERATOR
TC4510BP
TC4013 x 2
TC4001 x 1
VDD = +15V
BASS. TONE
BASS. ENVE
B.D.
C.L.
H.C.
L.C.
CYM
H.H.
S.D.
RHYTHM
TC4050
When base
sounds
When a percussion sounds
GND

403 Main 2

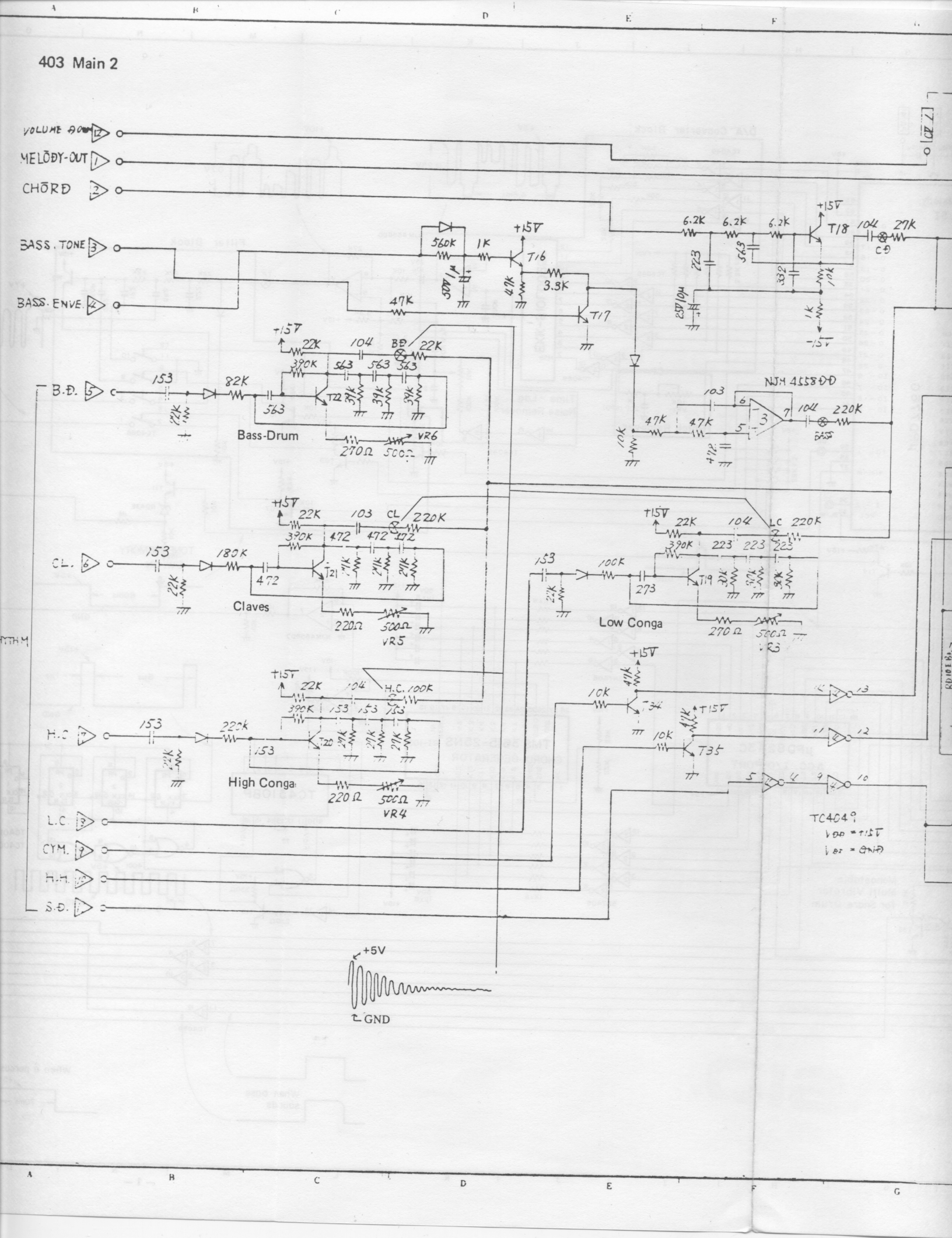
VOLUME ADJ
MELODY-OUT
CHORD
BASS. TONE
BASS. ENVE.
B.D.
CL.
H.C
L.C.
CYM.
H.H.
S.D.
+15V
-15V
+5V
GND
Bass-Drum
Claves
High Conga
Low Conga
NJM 4558DD
TC4049
VR6
VR5
VR4
VR3

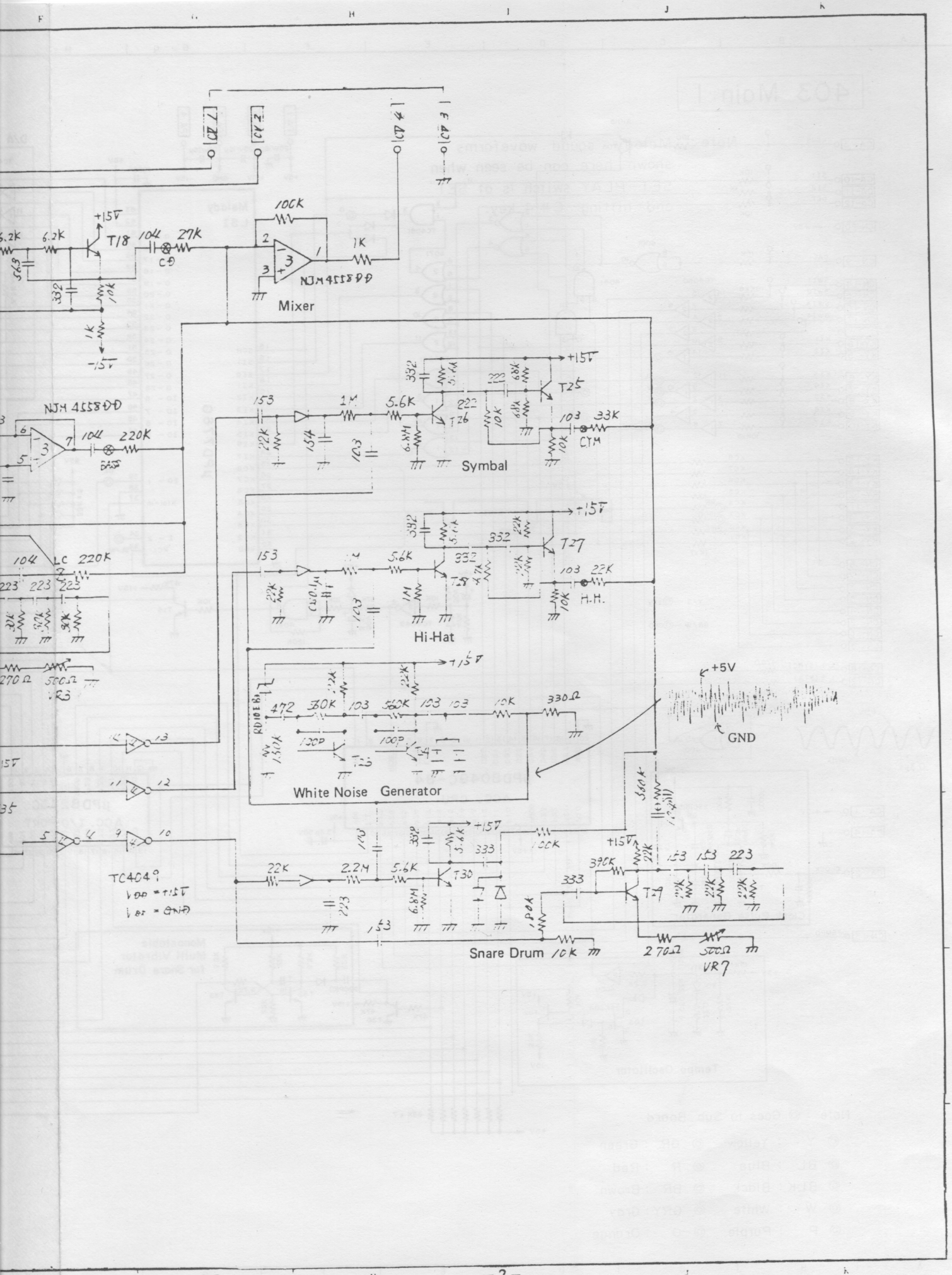

Mixer
NJM4558DD
Symbal
Hi-Hat
White Noise Generator
Snare Drum
+5V
GND
TC4049
VDD = +15V
VSS = GND

403 Console 1

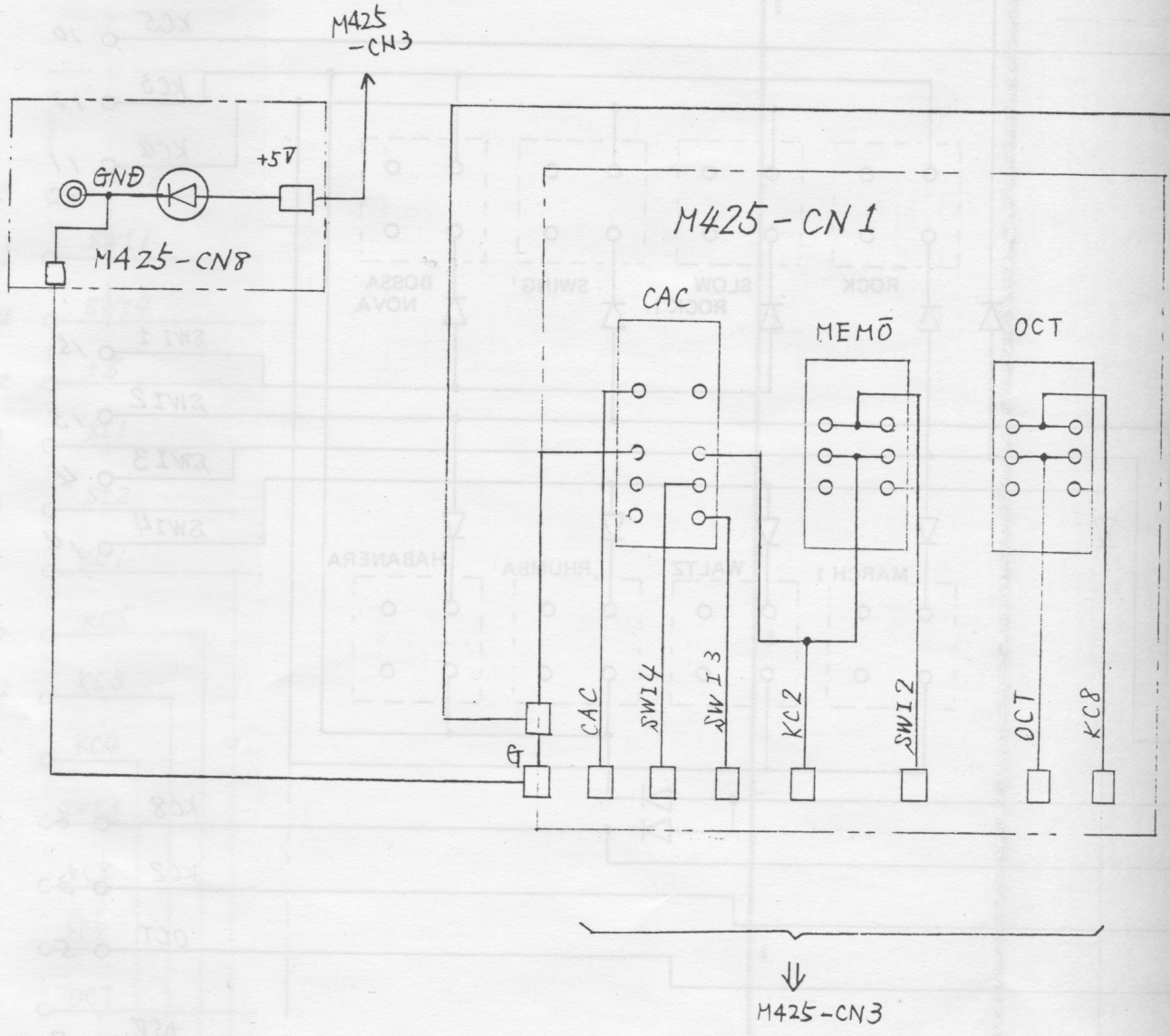

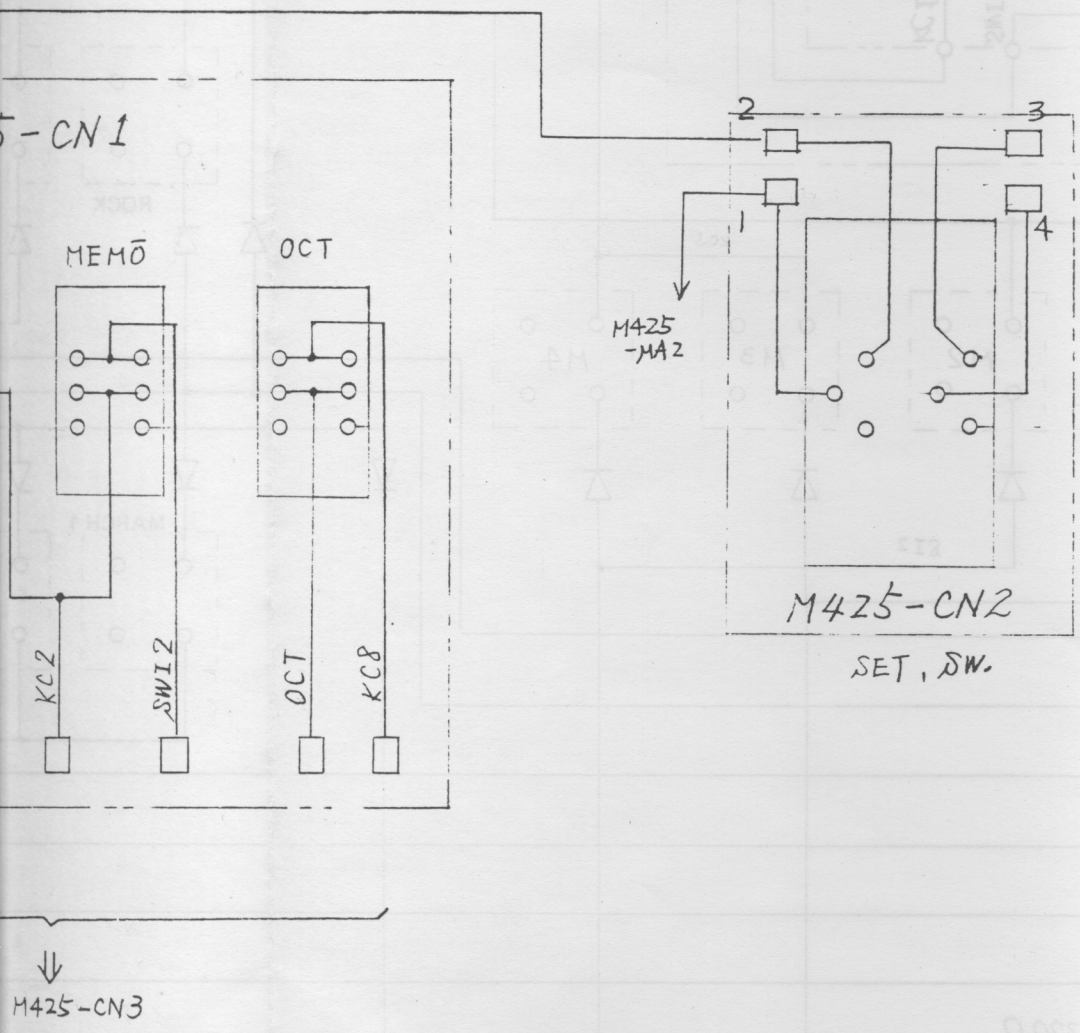

PA-0016 31.0. 2000 tama

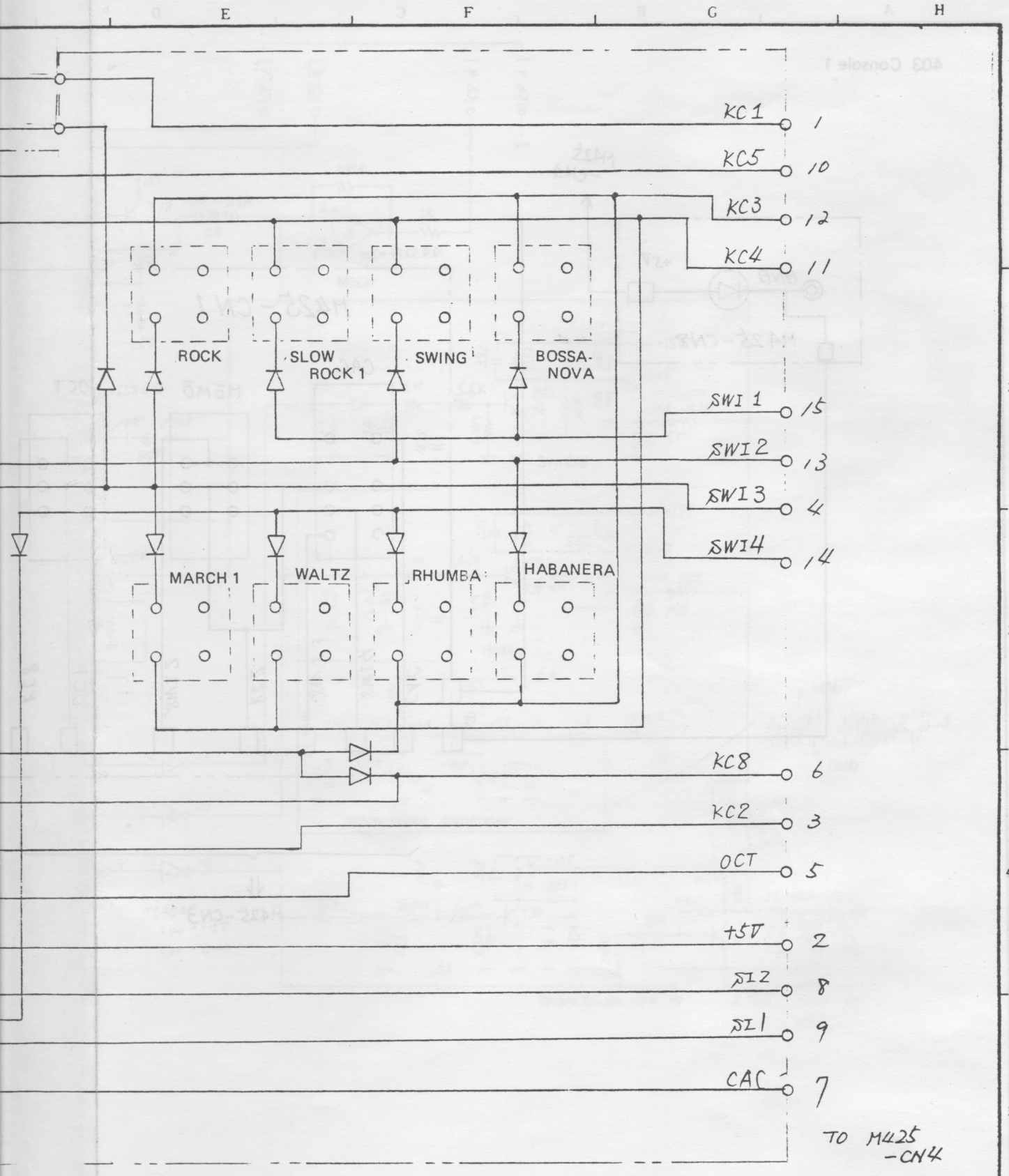

PA-0016 31.9. 2000 tama

403 Console 2

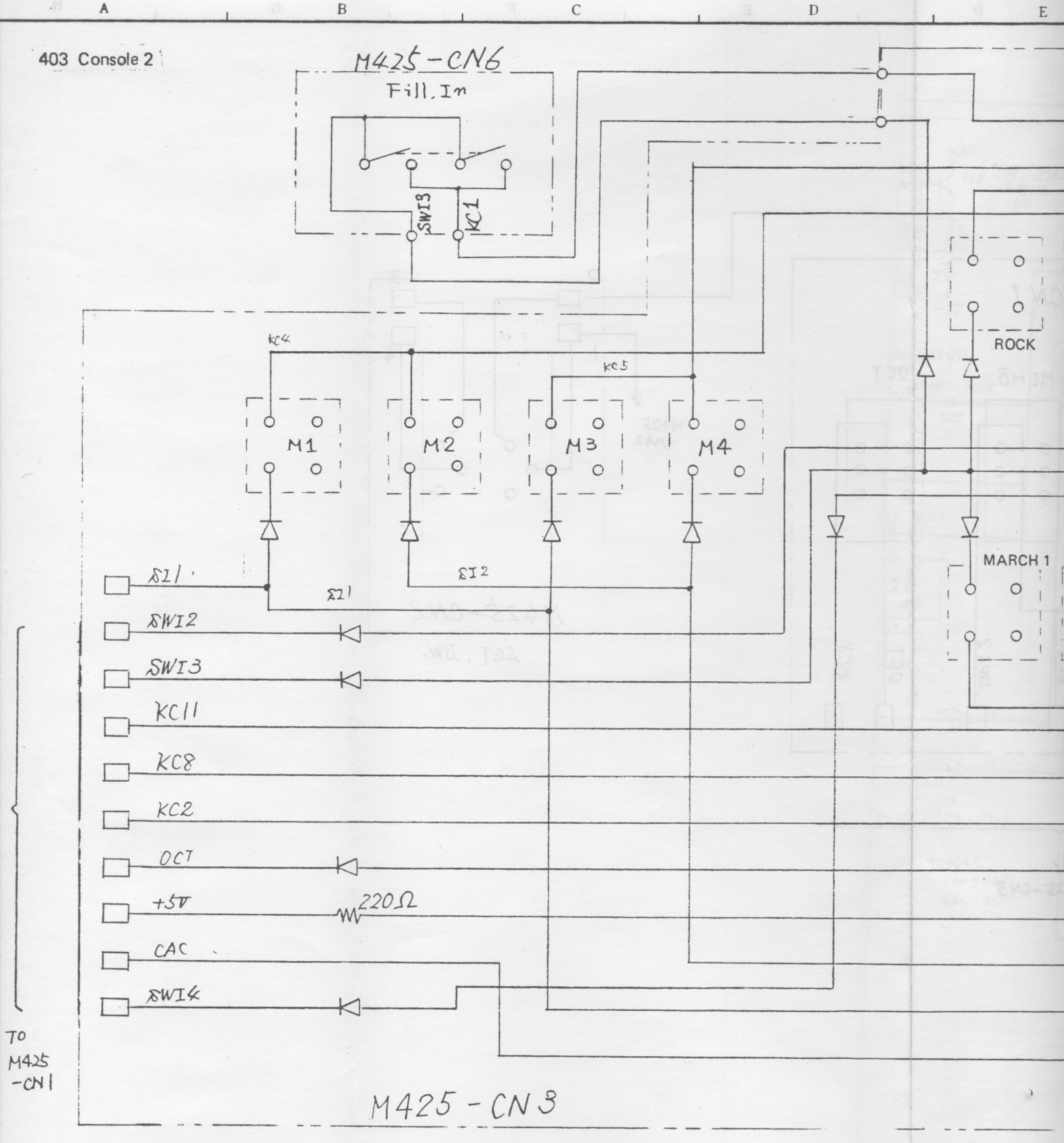

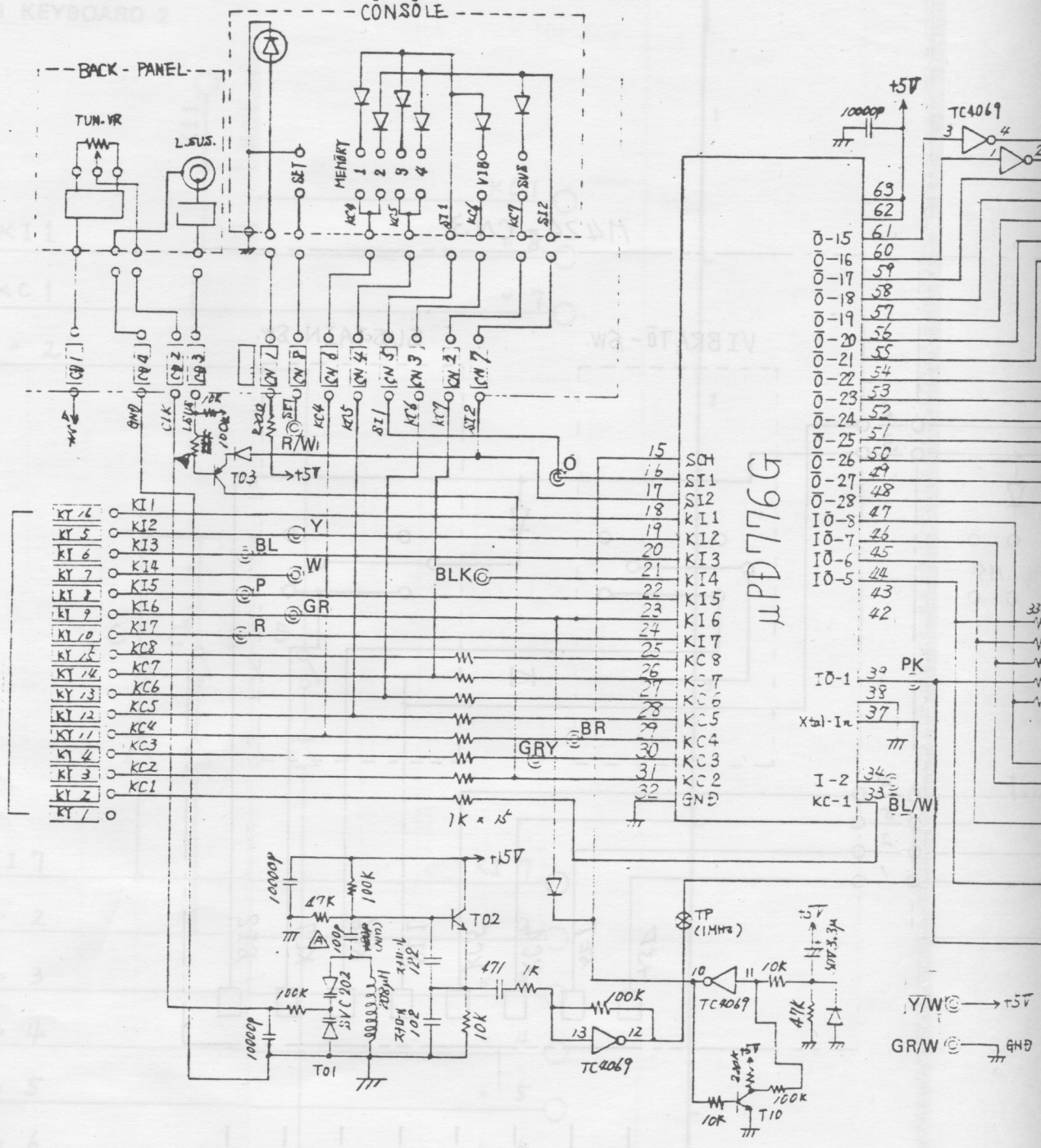
CONSOLE
BACK - PANEL
TUN. VR
L.SUS.
SET
MEMORY
1
2
3
4
V180
SUS
SI1
SI2
KC9
KC5
KC4
KC7
+5V
100000P
TC4069
μPD776G
SCH
SI1
SI2
KI1
KI2
KI3
KI4
KI5
KI6
KI7
KC8
KC7
KC6
KC5
KC4
KC3
KC2
KC1
GND
Ō-15
Ō-16
Ō-17
Ō-18
Ō-19
Ō-20
Ō-21
Ō-22
Ō-23
Ō-24
Ō-25
Ō-26
Ō-27
Ō-28
IŌ-8
IŌ-7
IŌ-6
IŌ-5
IŌ-1
PK
Xtal-In
I-2
KC-1
BL/W
R/W1
TO3
BL
Y
P
W
GR
R
BLK
BR
GRY
1k x 15
TO2
TO1
TP
(1MHz)
TC4069
Y/W
GR/W
GND
T10

1)

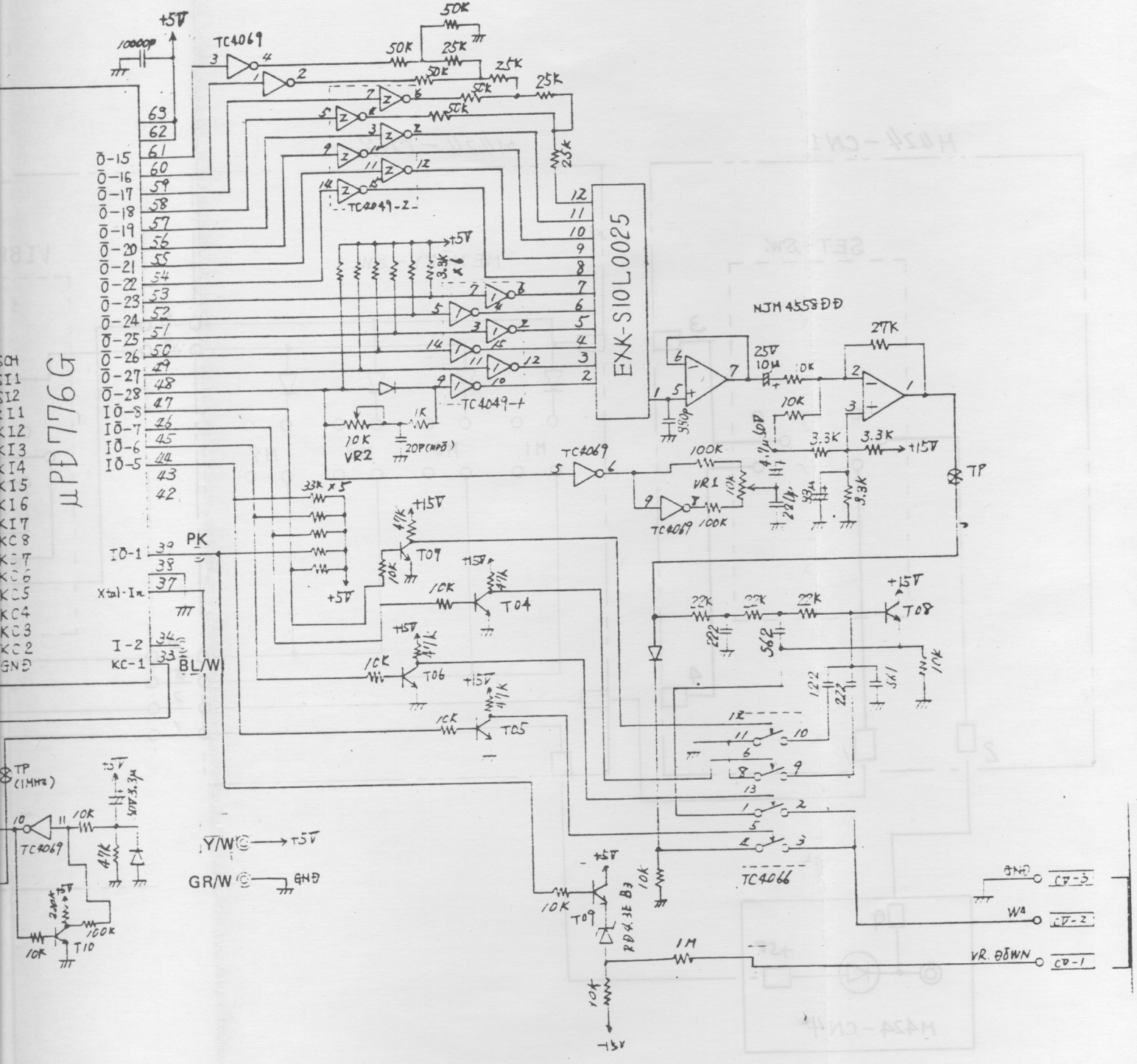
μPD776G
EXK-S10L0025
NJM4558DD
TC4069
TC4049-2
TC4049-1
TC4066
VR1
VR2
VR. DOWN
PK
BL/W
Y/W
GR/W
GND
TP
TP (1MHz)
+5V
+15V
-15V
10000p
50K
25K
27K
3.3K
100K
10K
1M
22K
47K
10K
33K x 5
Xtal-In
I-2
KC-1
IO-1
IO-5
IO-6
IO-7
IO-8
O-15
O-16
O-17
O-18
O-19
O-20
O-21
O-22
O-23
O-24
O-25
O-26
O-27
O-28
SCH
SI1
SI2
KI1
KI2
KI3
KI4
KI5
KI6
KI7
KC8
KC7
KC6
KC5
KC4
KC3
KC2
GND
CV-3
CV-2
CV-1
WA
RD4.3E B3
T04
T05
T06
T07
T08
T09
T10

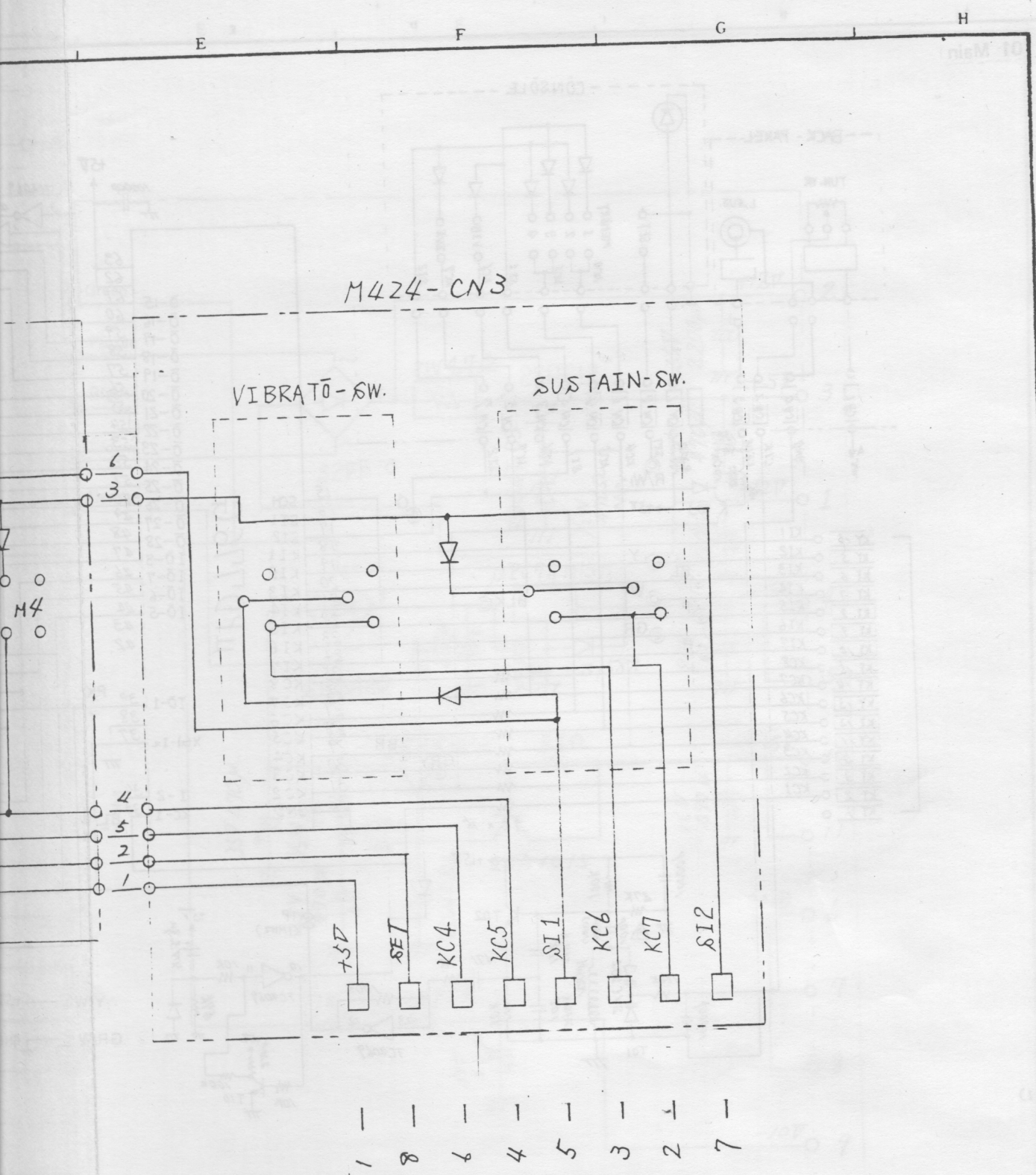

PA-0016 31.9. 2000 tama

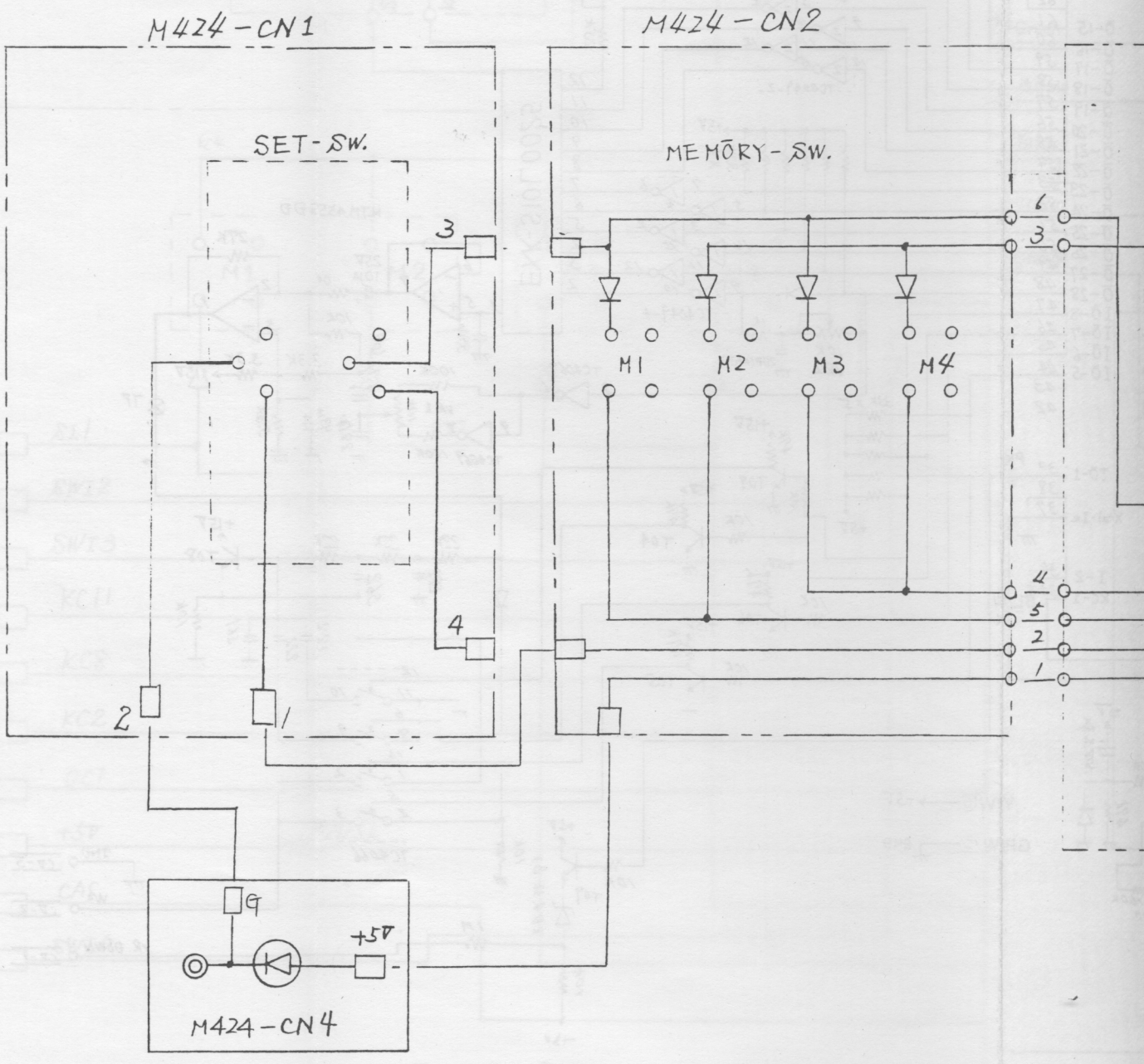
M424-CN1
M424-CN2
SET-SW.
MEMORY-SW.
3
4
2
1
6
3
4
5
2
1
M1
M2
M3
M4
G
+5V
M424-CN4

403, 101 KEYBOARD 2

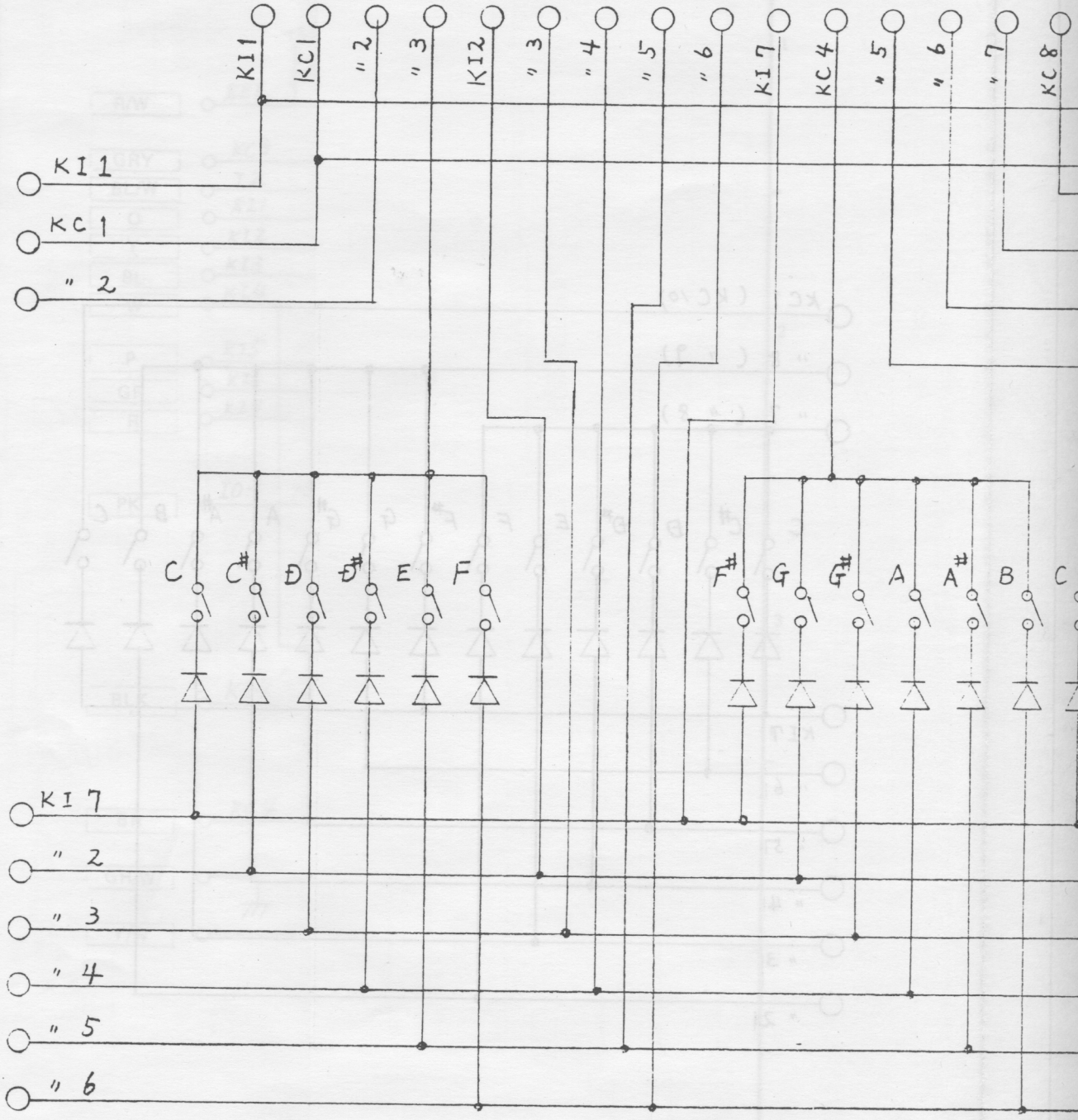

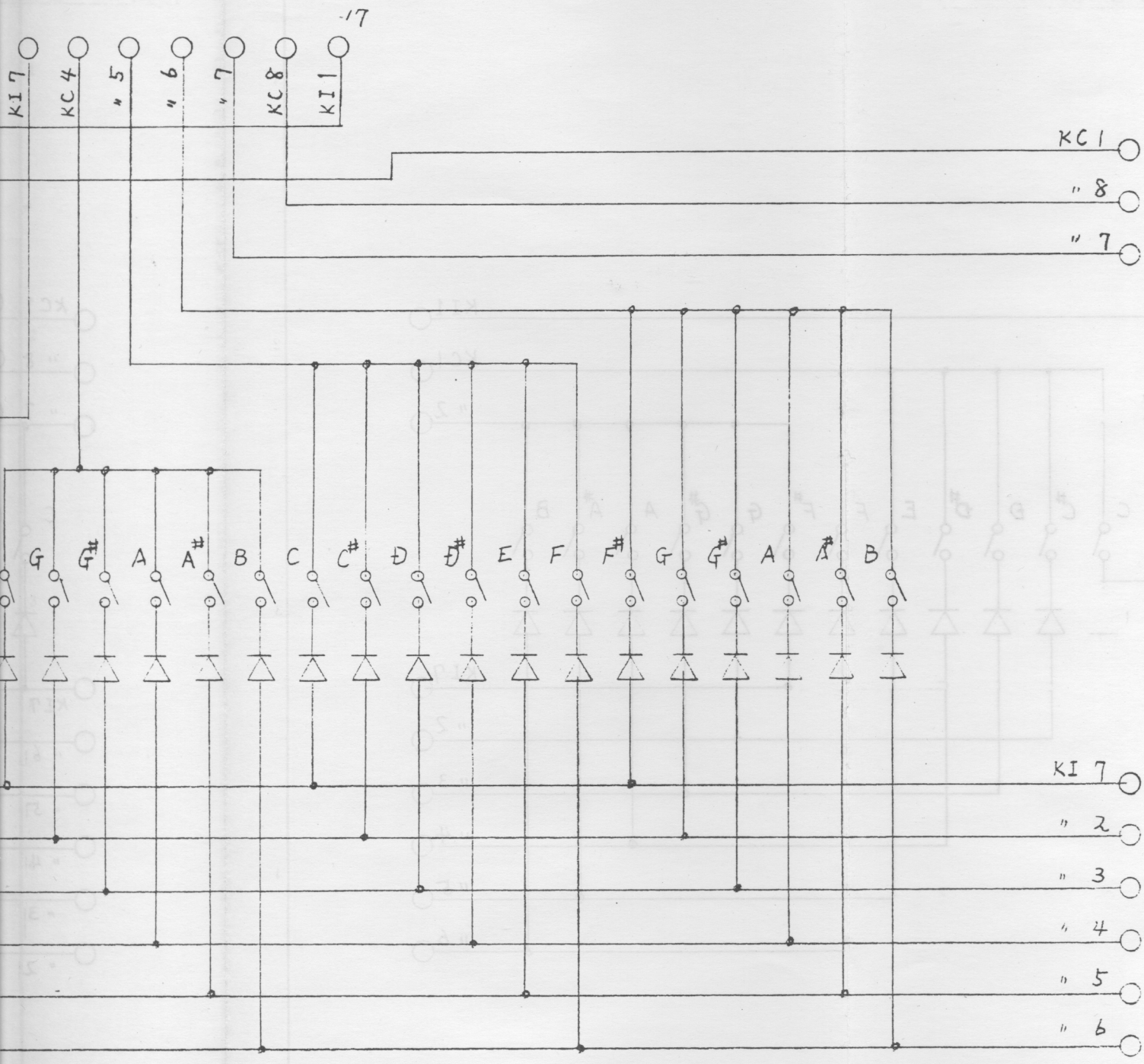

PA-0016 Oct. 2000 tam

403, 101 KEYBOARD 3

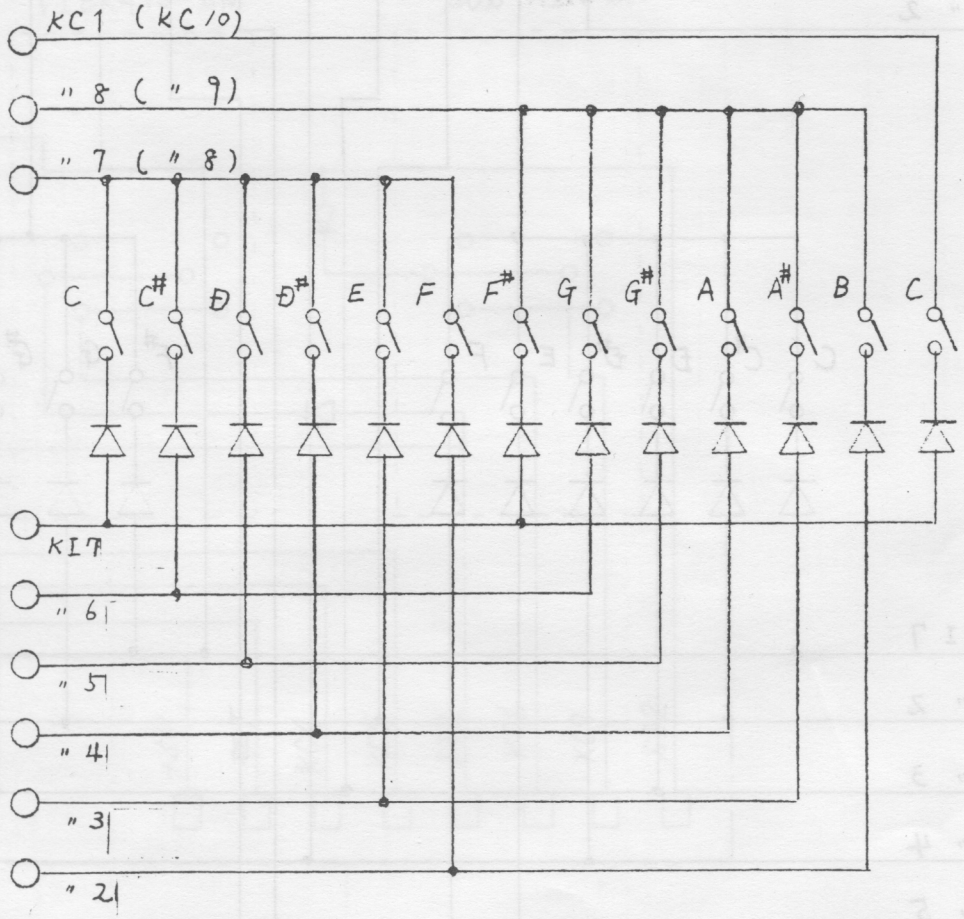

PA — 0015 54.10. 5000 tama

403, 101 KEYBOARD 1

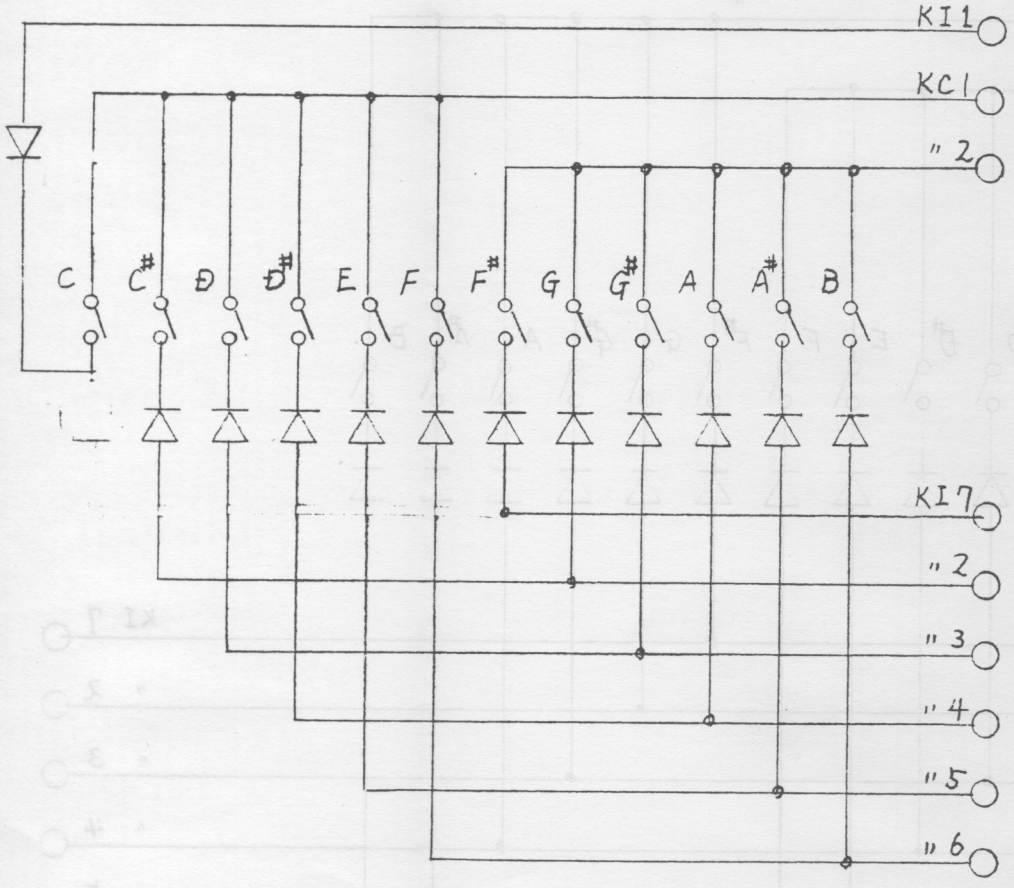

403, 101 KEYBOAR

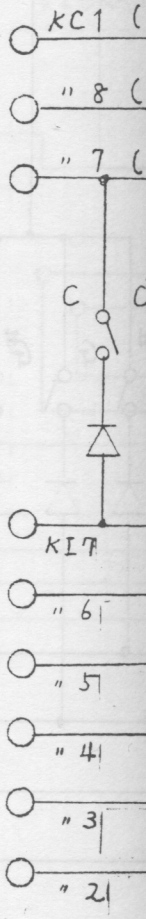

403, 101 Sub Board

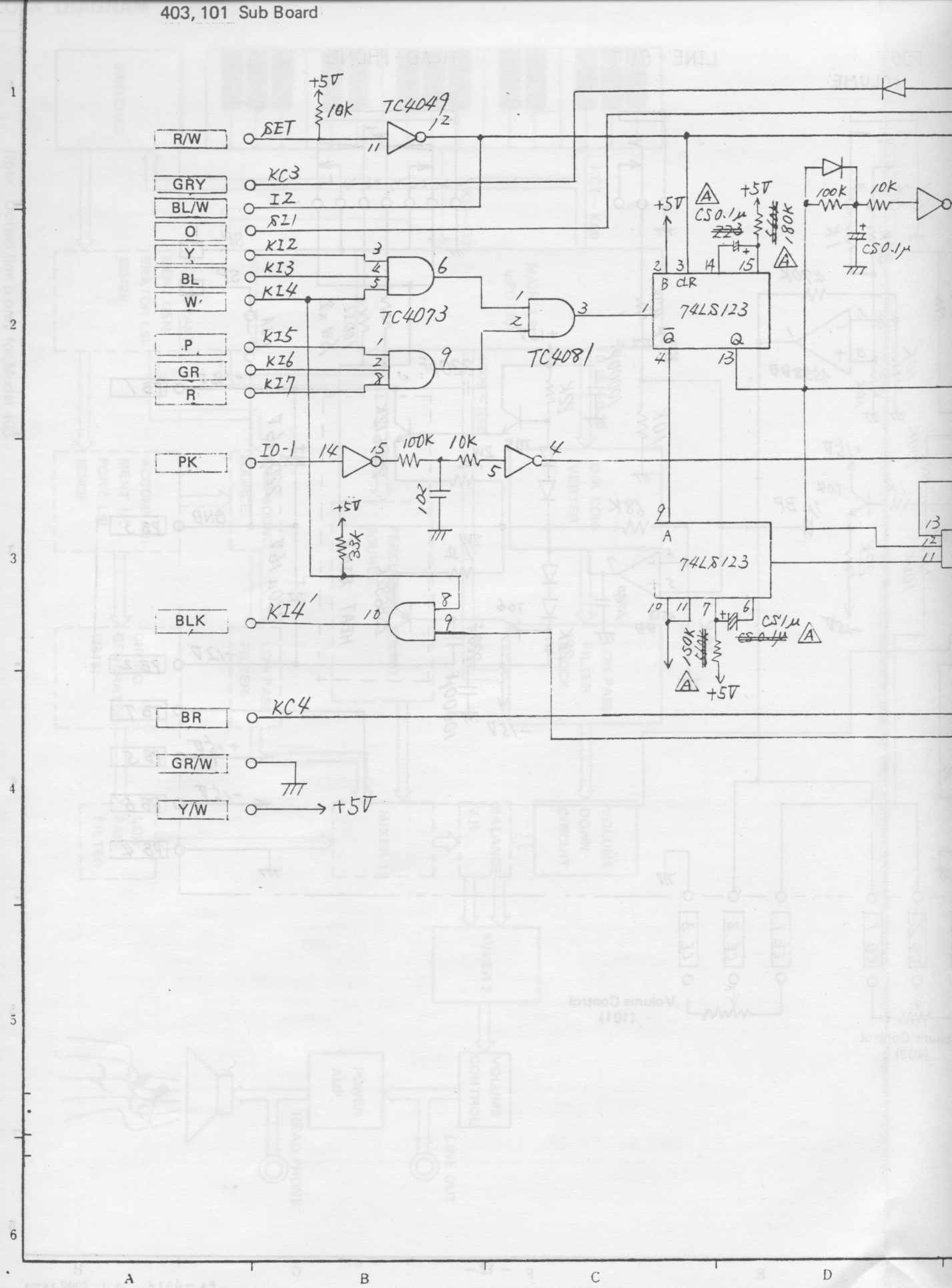

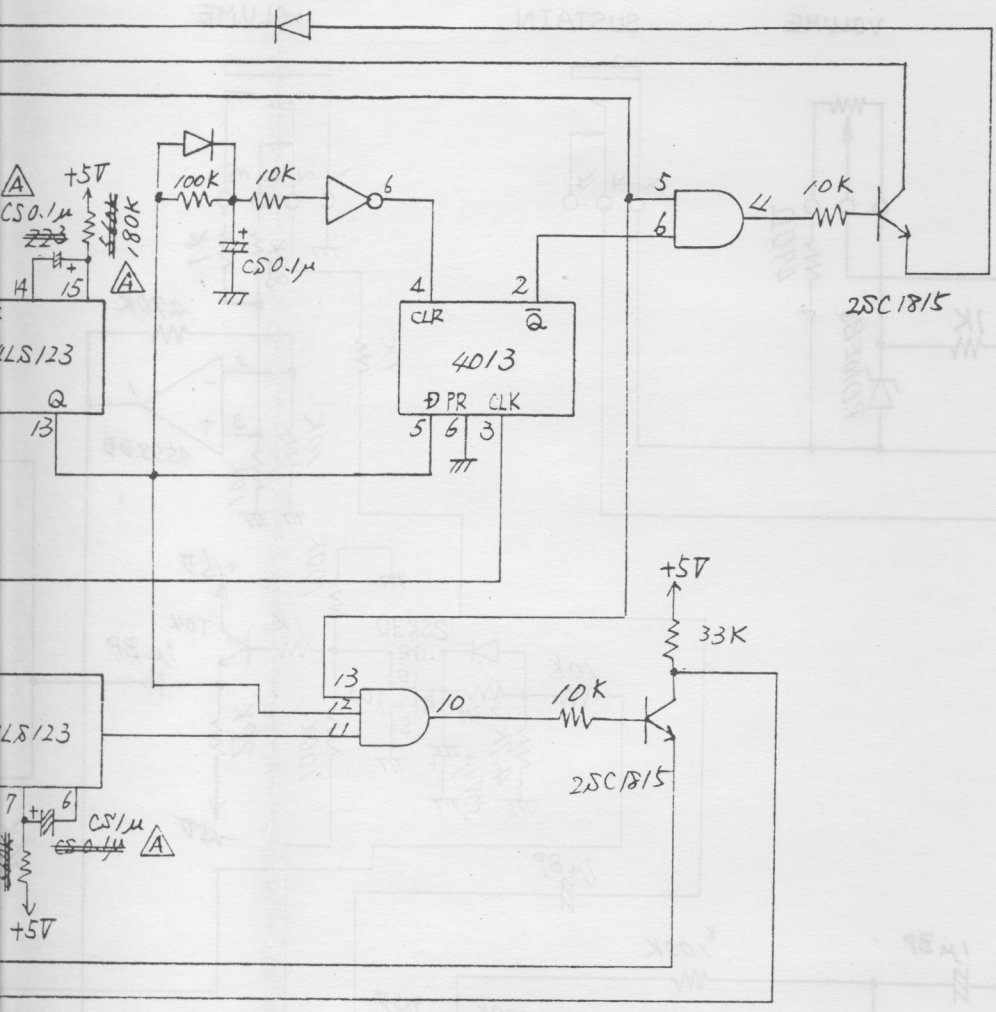

PA—0016 Oct. 2000 tama

403, 101 Amplifier

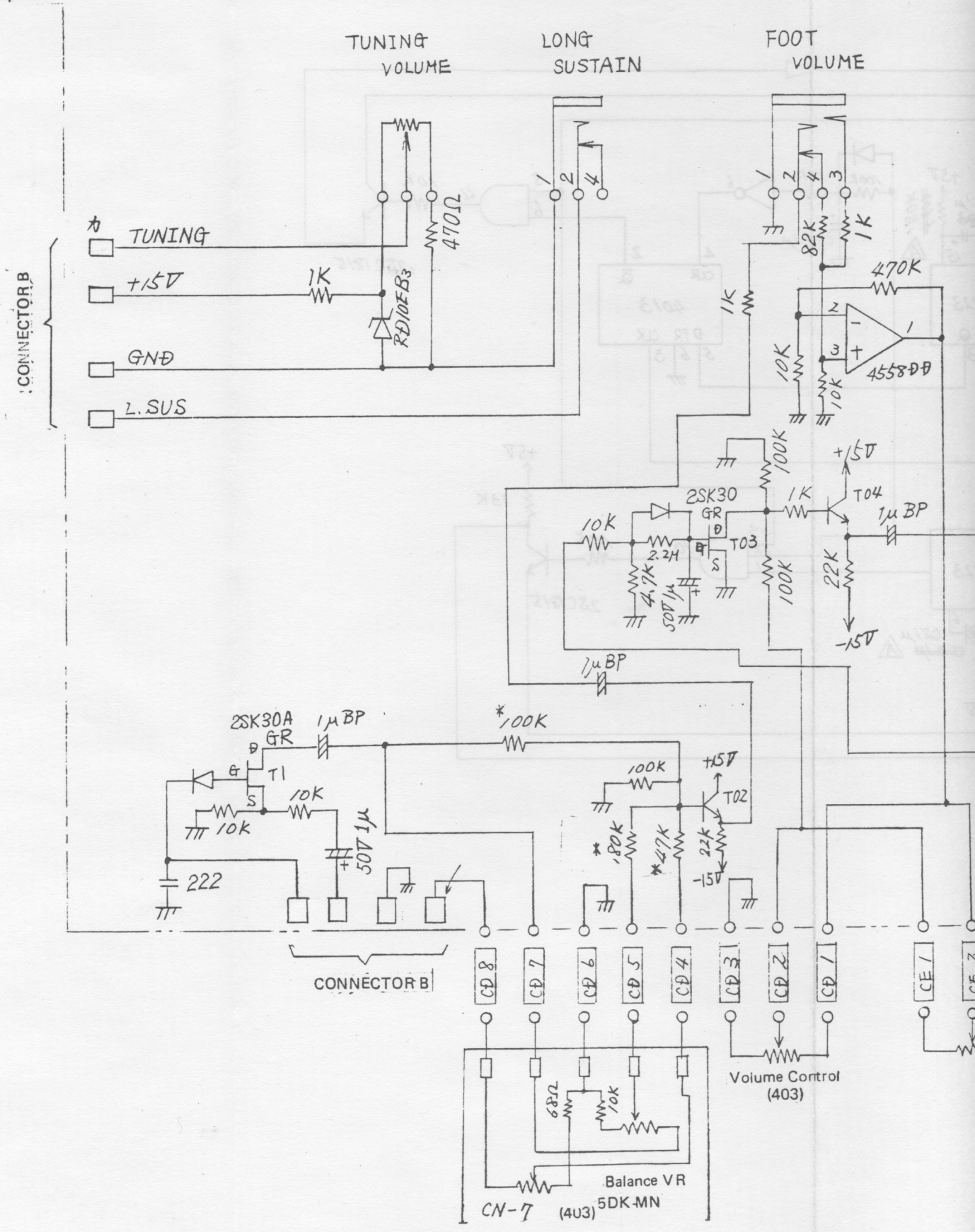

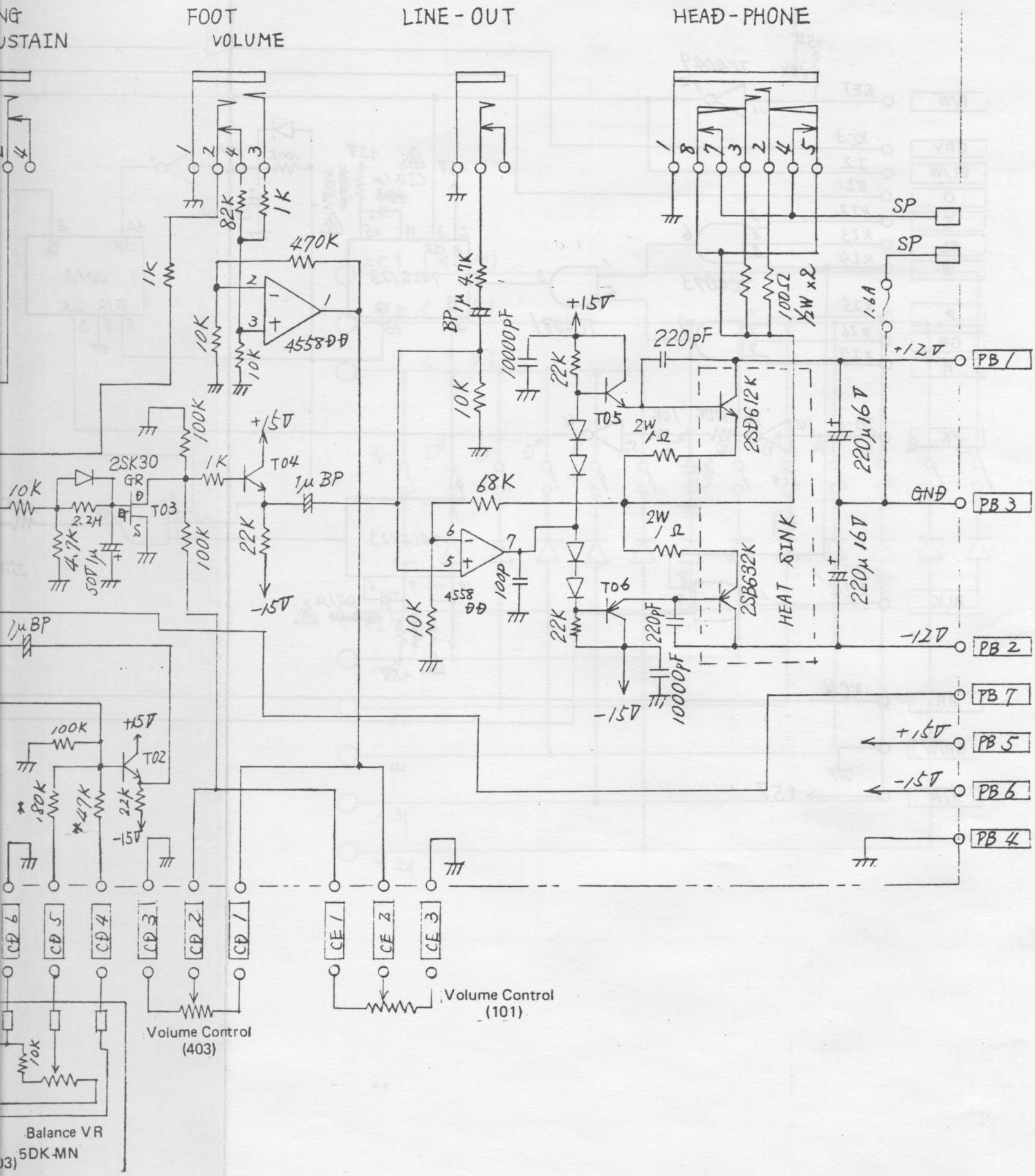

PA—0016 Oct. 2000 tama

403, 101 Amplifier

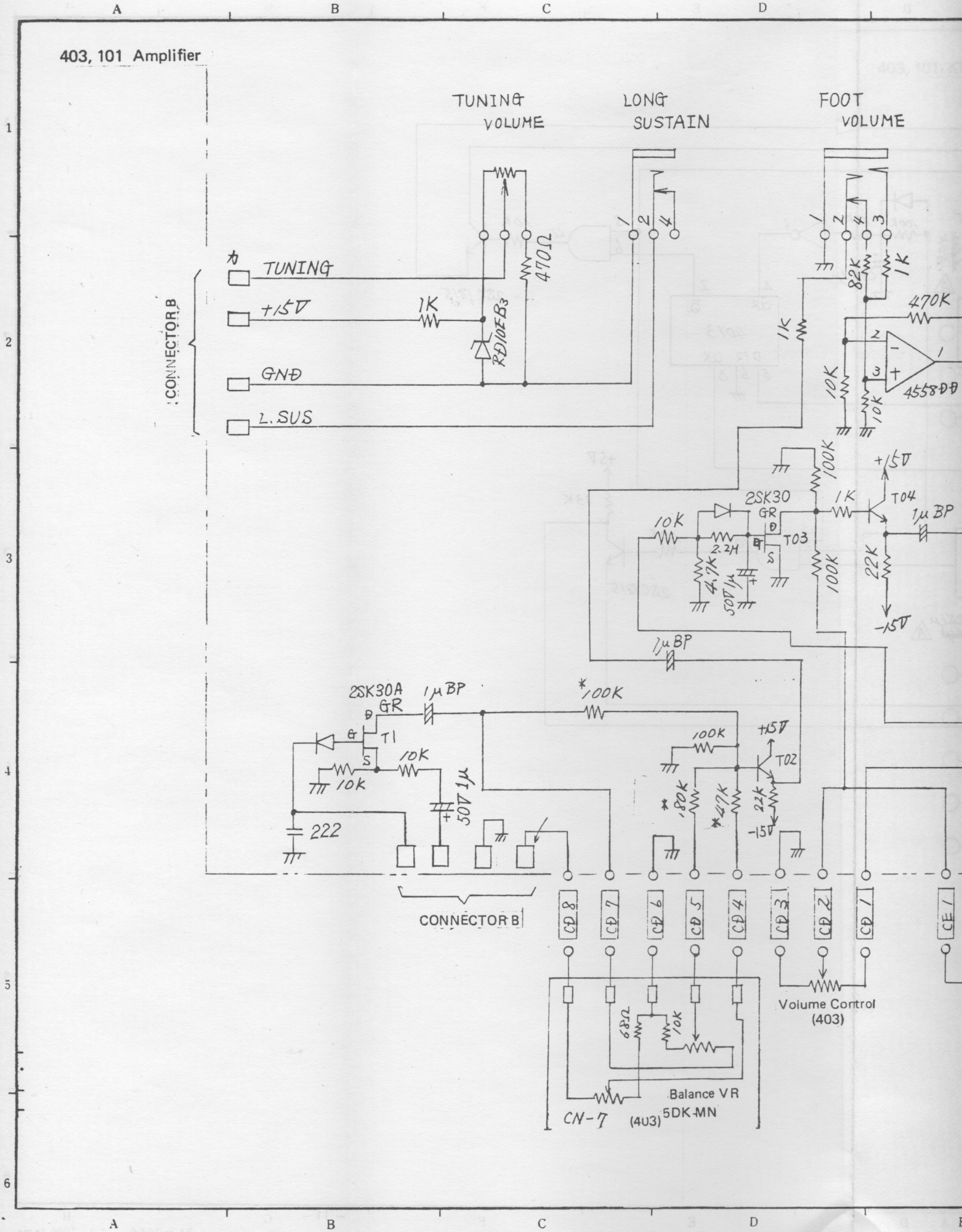

3. BLOCK DIAGRAM

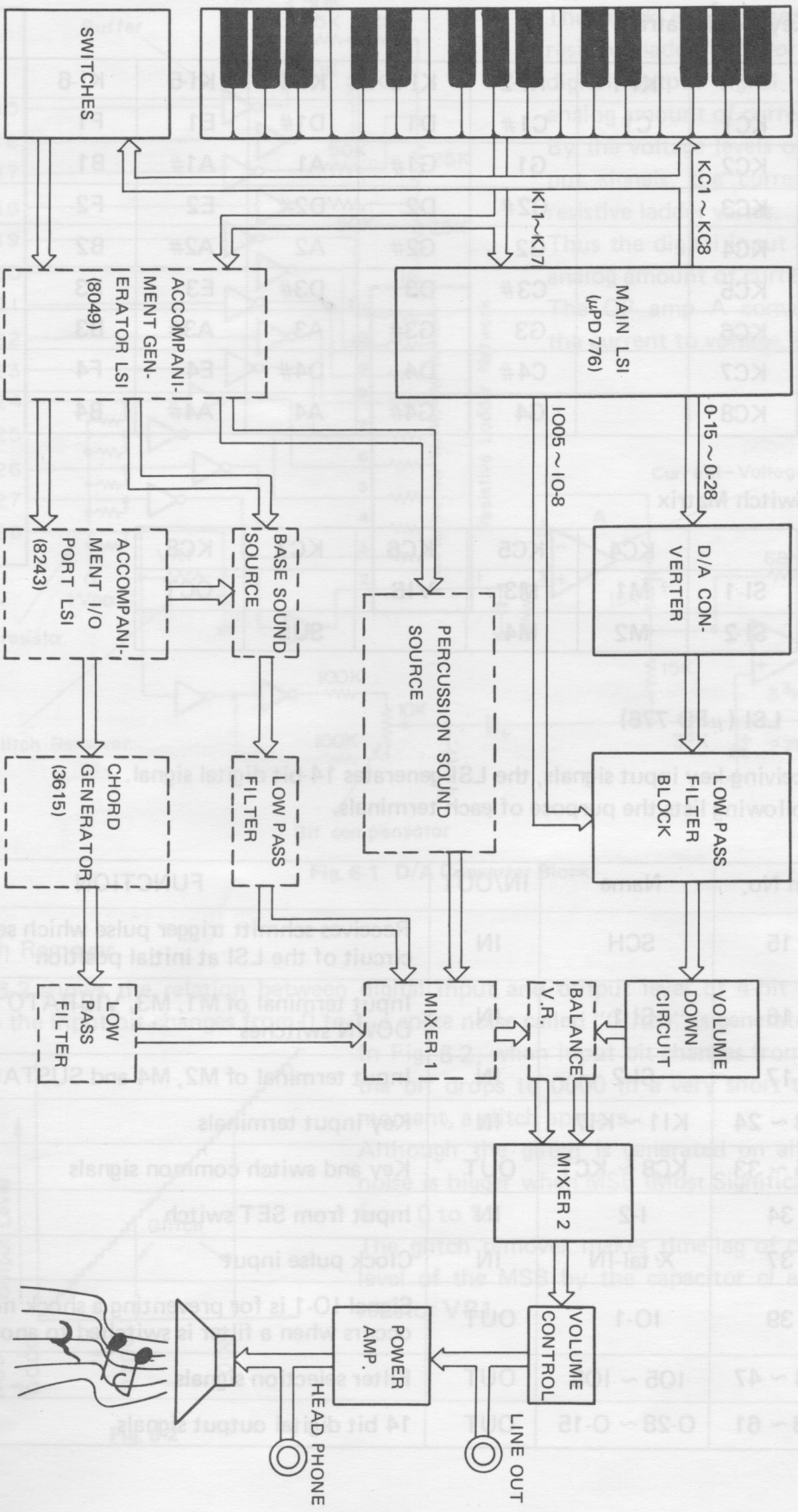

Note: Dotted line is only for Model 403

4. KEYBOARD & SWITCHES

4-1 Keyboard Matrix

	KI-1	KI-2	KI-3	KI-4	KI-5	KI-6	KI-7
KC1	C1	C1#	D1	D1#	E1	F1	C5
KC2		G1	G1#	A1	A1#	B1	F1#
KC3		C2#	D2	D2#	E2	F2	C2
KC4		G2	G2#	A2	A2#	B2	F2#
KC5		C3#	D3	D3#	E3	F3	C3
KC6		G3	G3#	A3	A3#	B3	F3#
KC7		C4#	D4	D4#	E4	F4	C4
KC8		G4	G4#	A4	A4#	B4	F4#

Switch Matrix

	KC4	KC5	KC6	KC7	KC8
SI-1	M1	M3	VIB		OCT
SI-2	M2	M4		SUS	

5. MAIN LSI (μPD 776)

By receiving key input signals, the LSI generates 14-bit digital signal.
The following lists the purpose of each terminals.

Pin No.	Name	IN/OUT	FUNCTION
15	SCH	IN	Receives schmitt trigger pulse which sets the internal circuit of the LSI at initial position
16	SI-1	IN	Input terminal of M1, M3, VIBRATO and OCTAVE DOWN switches
17	SI-2	IN	Input terminal of M2, M4 and SUSTAIN switches
18 ~ 24	KI1 ~ KI7	IN	Key input terminals
25 ~ 33	KC8 ~ KC1	OUT	Key and switch common signals
34	I-2	IN	Input from SET switch
37	X'tal-IN	IN	Clock pulse input
39	IO-1	OUT	Signal IO-1 is for preventing a shock noise which occurs when a filter is switched to another
44 ~ 47	IO5 ~ IO8	OUT	Filter selection signals
48 ~ 61	O-28 ~ O-15	OUT	14 bit digital output signals

6. D/A CONVERTER BLOCK

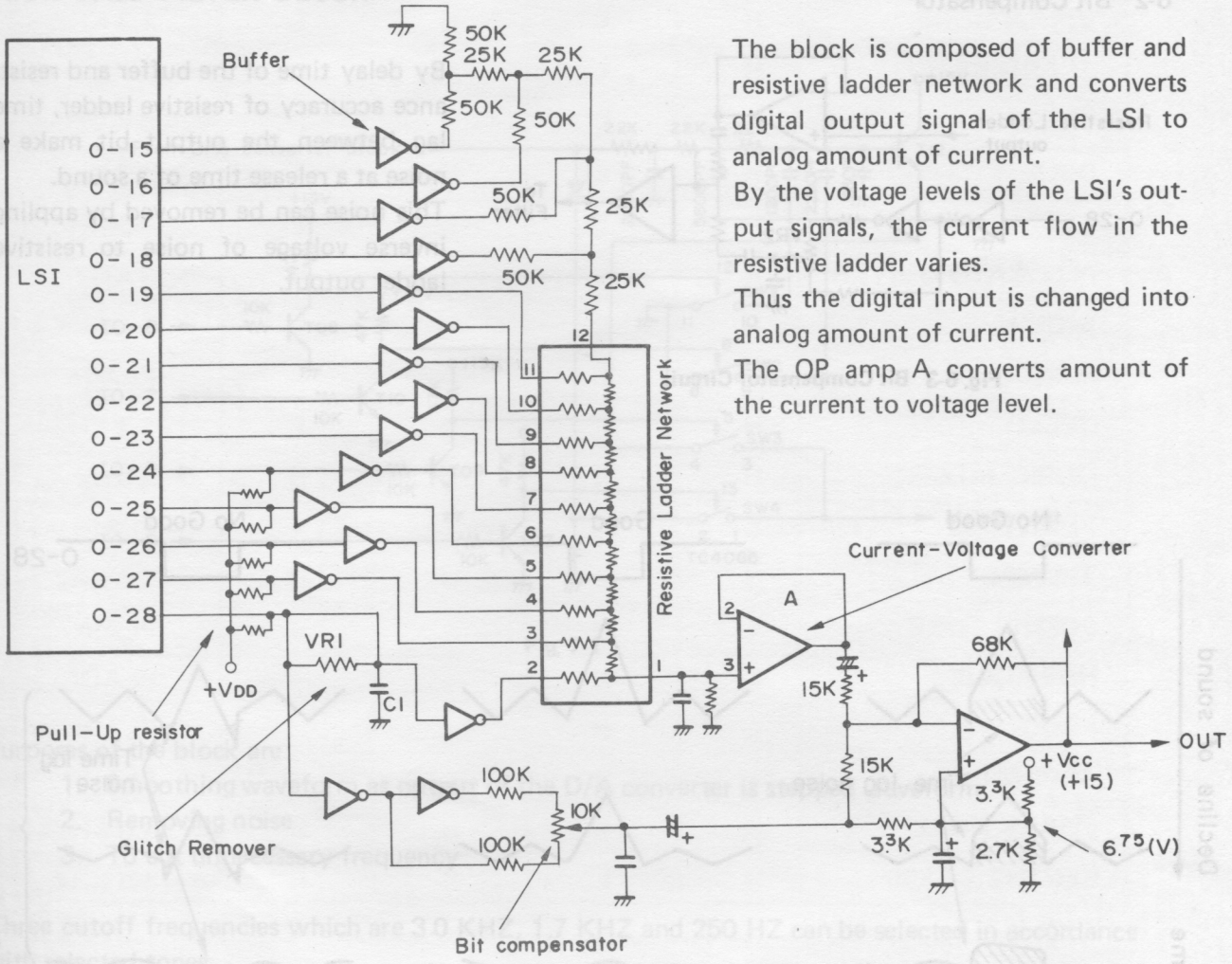

The block is composed of buffer and resistive ladder network and converts digital output signal of the LSI to analog amount of current.

By the voltage levels of the LSI's output signals, the current flow in the resistive ladder varies.

Thus the digital input is changed into analog amount of current.

The OP amp A converts amount of the current to voltage level.

Fig. 6-1 D/A Converter Block

6-1 Glitch Remover

Fig. 6-2 shows the relation between digital input and output level of 4-bit D/A converter. When the input bit changes from 0 to 1, a spike noise called "Glitch" is generated.

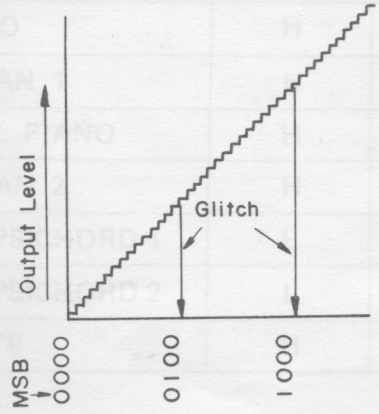

Fig. 6-2

In Fig. 6-2, when input bit changes from 0111 to 1000, the bit drops to 0000 in a very short time and at this moment, a glitch appears.

Although the glitch is generated on all the steps, the noise is bigger when MSB (Most Significant Bit) changes from 0 to 1.

The glitch remover makes time-lag of changing voltage level of the MSB by the capacitor cl and the variable resistor VR1.

6-2 Bit Compensator

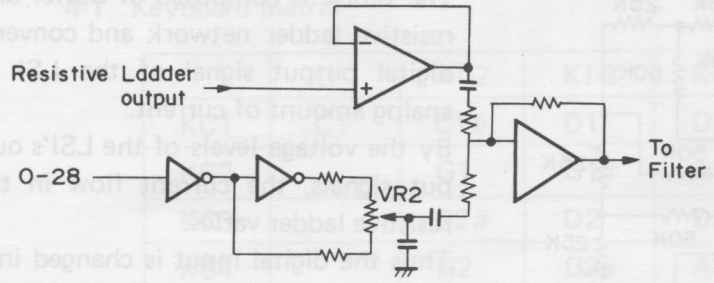

Fig. 6-3 Bit Compensator Circuit

By delay time of the buffer and resistance accuracy of resistive ladder, time lag between the output bit make a noise at a release time of a sound.
This noise can be removed by appling inverse voltage of noise to resistive ladder output.

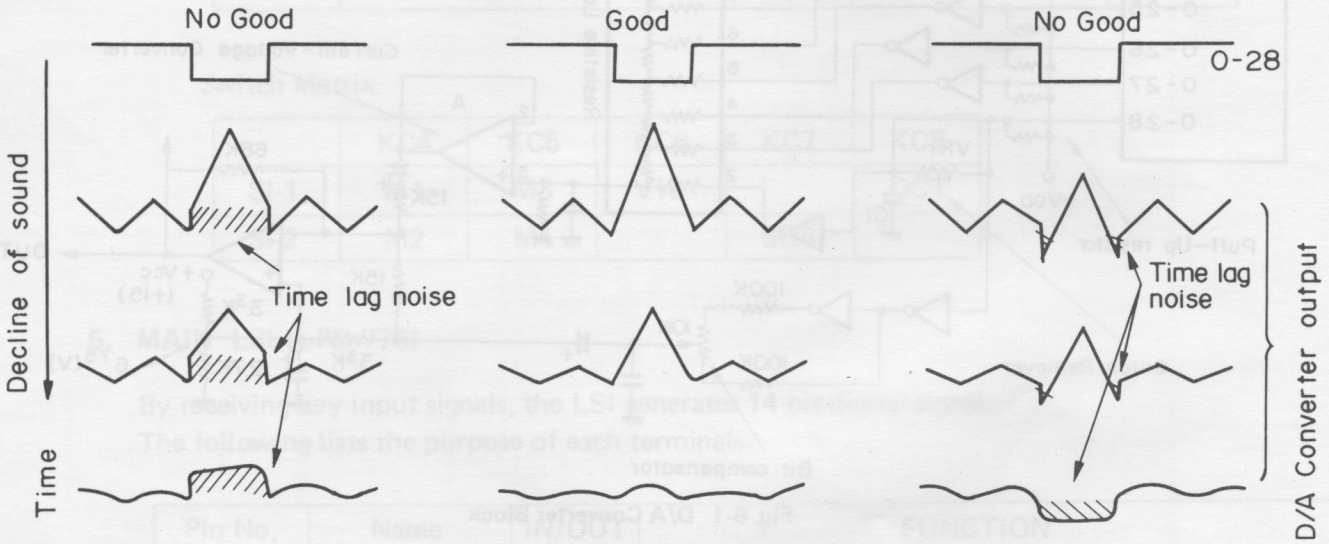

Fig. 6-4 An Example of Time Lag Noise

7. LOW PASS FILTER BLOCK

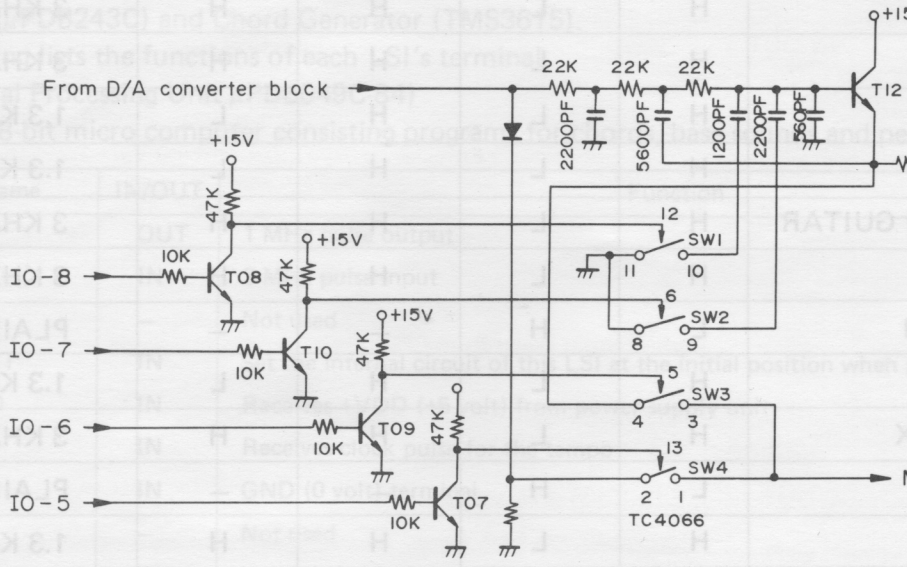

Fig. 7-1

Purposes of the block are:

1. Smoothing waveform as output of the D/A converter is stepped waveform.
2. Removing noise
3. To cut unnecessary frequency

Three cutoff frequencies which are 3.0 KHZ, 1.7 KHZ and 250 HZ can be selected in accordance with selected tones.

Each cutoff frequency is selected by the voltage levels of the signals IO-5, IO-6, IO-7 and IO-8. The following table shows cutoff frequencies and voltage levels of the signals IO-5 ~ IO-8 in each tone.

Tone	IO-5	IO-6	IO-7	IO-8	fc
PIANO	H	L	L	L	250 HZ
ORGAN 1	H	L	H	L	1.3 KHZ
ELEC. PIANO	H	L	H	H	3 KHZ
ORGAN 2	H	L	H	H	3 KHZ
HARPSICHORD 1	L	H	—	—	PLAIN*
HARPSICHORD 2	L	H	—	—	PLAIN
FLUTE	H	L	H	L	1.3 KHZ

VIBRAPHONE	H	L	H	L	1.3 KHZ
CLARINET	H	L	H	H	3 KHZ
CELESTA	H	L	H	H	3 KHZ
OBOE	H	L	H	L	1.3 KHZ
GUITAR	H	L	H	L	1.3 KHZ
PIZZICATO GUITAR	H	L	H	H	3 KHZ
VIOLIN	H	L	H	H	3 KHZ
MANDOLIN	L	H	—	—	PLAIN
CELLO	H	L	H	L	1.3 KHZ
MUSIC BOX	H	L	H	H	3 KHZ
FUNNY	L	H	—	—	PLAIN
TRUMPET	H	L	H	H	1.3 KHZ
COSMIC TONE	L	H	—	—	PLAIN
HARMONICA	L	H	—	—	PLAIN
FROG	L	H	—	—	PLAIN
ACCORDION	L	H	—	—	PLAIN
FUNNY FUZZ	H	L	H	H	1.3 KHZ
SYNTHE BRASS	H	L	H	H	1.3 KHZ

* PLAIN : Signal does not pass through any filter.

8. CUT CIRCUIT

As a shock noise may be generated when a filter is switched, the circuit cut the output signal when a tone memory is switched to another.

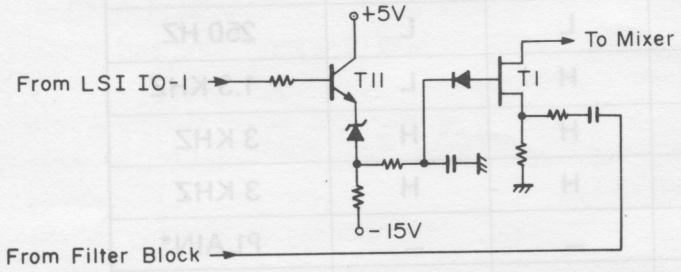

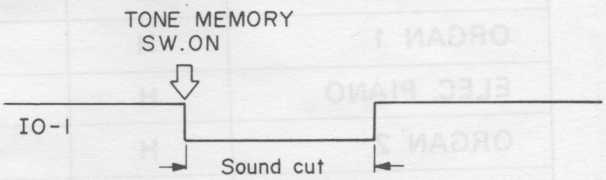

When a TONE MEMORY switch is depressed, signal IO-1 drops to LOW level for approximately 80 milliseconds and the transistor T11 and the FET are turned off causing to cut off the output signal from the filter block.

9. (ACCOMPANIMENT)

Accompaniment which are percussion, chord and base sounds are generated by the CPU (μPD8049-84), I/O PORT (μPD8243C) and Chord Generator (TMS3615).

The following lists the functions of each LSI's terminal.

CPU (Central Processing Unit μPD8049C-84)

This LSI is 8-bit micro computer consisting programs for chords, base sounds and percussion sounds.

Pin No.	Name	IN/OUT	Function
1	TO	OUT	1 MHz pulse output
2	X/TAL	IN	3 MHz pulse input
3	–	–	Not used
4	RESET	IN	Set the internal circuit of this LSI at the initial position when power is turned on
5	+VDD	IN	Receives +VDD (+5 volt) from power supply unit
6	INT	IN	Receives clock pulse for the tempo
7	EA	IN	GND (0 volt) terminal
8~11	–	–	Not used
12~19	DB0~DB7	IN	Key input terminals
20	GND	IN	GND terminal
21~25	P20~PROG	OUT	Chord output
26	+VDD	IN	+VDD terminal
27	P10	OUT	Output of envelope waveform for base sound
28	P11	OUT	Hi-hat output
29	P12	OUT	Cymbal output
30	P13	OUT	Low conga output
31	P14	OUT	High conga output
32	P15	OUT	Claves output
33	P16	OUT	Snare drum output
34	P17	OUT	Bass drum output
35~38	SW1~SW4	IN	Switch input terminals. By receiving common signals KC1 ~ KC4 from these terminals, the LSI descriminates the statuses of the switches and levers.
39	T1	IN	Receives KC1 signal in order to be synchronized with the LSI μPD773
40	+VDD	IN	Receives +VDD (+5 volt)

	KC1	KC2	KC3	KC4
SW1	START /STOP		BOSSA-NOVA	SLOW ROCK 1
SW2	SYNCH. START	MEMORY ON	HABA-NERA	SWING
SW3	FILL IN	C.A.C. ON	ROCK	MARCH
SW4	VARI-ATION	C.A.C. FINGERED	RHUMBA	WALTZ

I/O Port (μPD8243C)

By receiving signals from the CPU, I/O port generates chord and pitch (frequency) of base sound.

Pin No.	Name	IN/OUT	Function
1	P50	OUT	E output
2	P40	OUT	C output
3	P41	OUT	C# output
4	P42	OUT	D output
5	P43	OUT	D# output
6	GND	IN	Connected to GND (0 volt)
7~11	PROG~P20	IN	Receive input signal from CPU. By variations of voltage levels of these terminals, the LSI generates corresponding output.
12	GND	IN	GND (0 volt) terminal
13	P70	OUT	L.E.D. (Green) drive signal
14	P71	OUT	L.E.D. (Red) drive signal
15	P72	OUT	Accompaniment start signal. When accompaniment starts, this terminal generates "L" level pulse.
16	P73	OUT	Base pitch output
17	P63	OUT	B output
18	P62	OUT	A# output
19	P61	OUT	A output
20	P60	OUT	G# output
21	P53	OUT	G output
22	P52	OUT	F# output
23	P51	OUT	F output
24	+VDD	IN	+VDD (+5 volt terminal)

Chord generator (TMS3615)

The LSI generates one octave tones in accordance with input K2 ~ K13 from the I/O port.

Pin No.	Name	IN/OUT	Function
3	SUS BIAS	IN	By the voltage level of this terminal, sustain length is selected
4	+VCC	IN	+VCC (+15 volt) terminal
5	K8	IN	F# input
6	K9	IN	G input
7	K10	IN	G# input
8	K11	IN	A input
9	K12	IN	A# input
10	K13	IN	B input
12	CLOCK	IN	Clock pulse (118.5 KHz) input
17	RESET IN	IN	Receives schmitt pulse which sets the internal circuit of the LSI when power switch is turned on
19	K2	IN	C input
20	K3	IN	C# input

Pin No.	Name	IN/OUT	Function
21	K4	IN	D input
22	K5	IN	D# input
23	K6	IN	E input
24	K7	IN	F input
25	STB IN	IN	Internal stabilizer control terminal
26	STB OUT	OUT	Internal stabilizer control terminal
27	OUT	OUT	Sound signal output terminal. Output signal is appeared as electric current.

9-1. (Percussion)

(A) Bass drum, Snare drum, Claves, Low conga, High conga

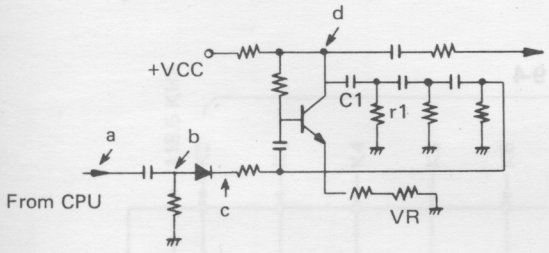

Fig. 9-1

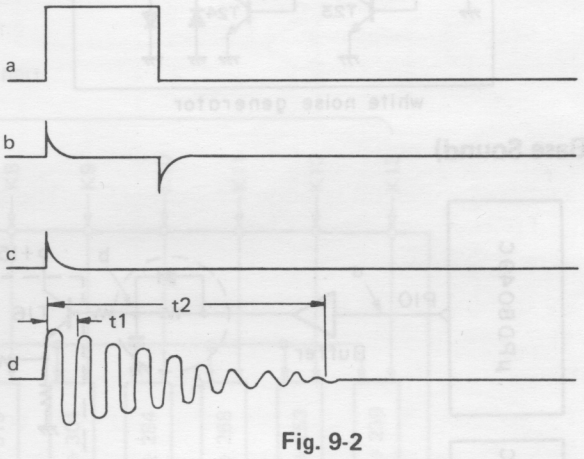

Fig. 9-2

As percussion output P11 ~ P17 from the CPU are single pulses, they should be changed to sound waveforms.

The frequency t1 is varied by the capacitor c1's and resistor r1's which are fixed in accordance with the percussion instruments.

The decreasing time t2 is varied by the variable resistor VR's.

The following shows the method of t2 adjustment.

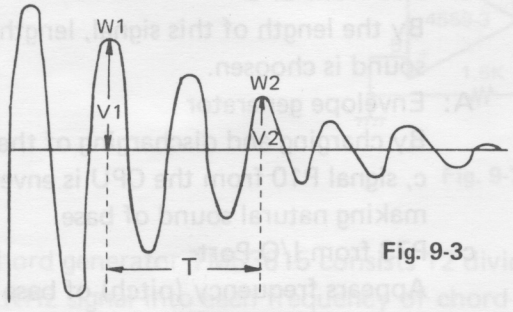

Fig. 9-3

1. Pick up any wave w1 and check it's voltage v1.
2. Find a wave w2 whose voltage v2 is about half of v1.
3. Set the length T between w1 and w2 as mentioned below by turning the variable resistor VR.

	Bass Drum	Snare Drum	Low Conga	High Conga	Claves
T	15 m sec.	7 m sec.	27 m sec.	16 m sec.	3.9 m sec.
VR to adjust	VR6	VR7	VR3	VR4	VR5

(B) Cymbal, Hi-hat, Snare drum

As those percussions have hissing sound, those sounds are created from a hiss noise so called "white noise".

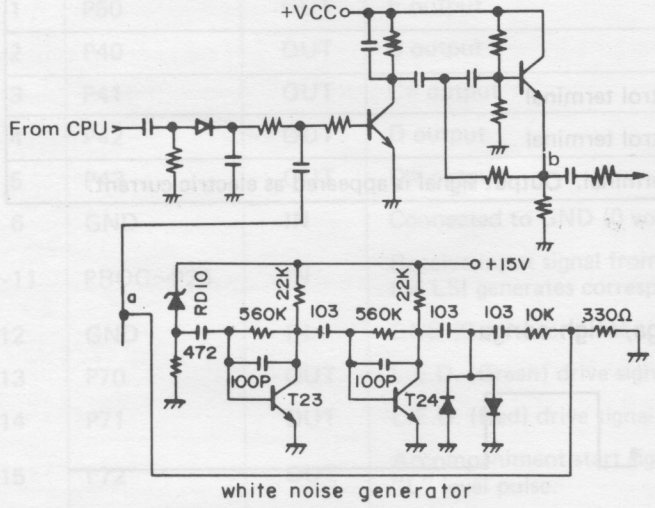

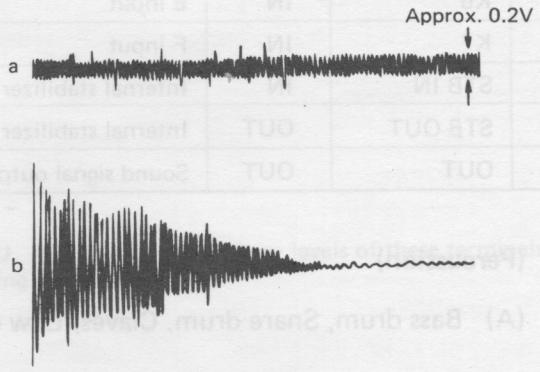

Fig. 9-4

9-2. (Base Sound)

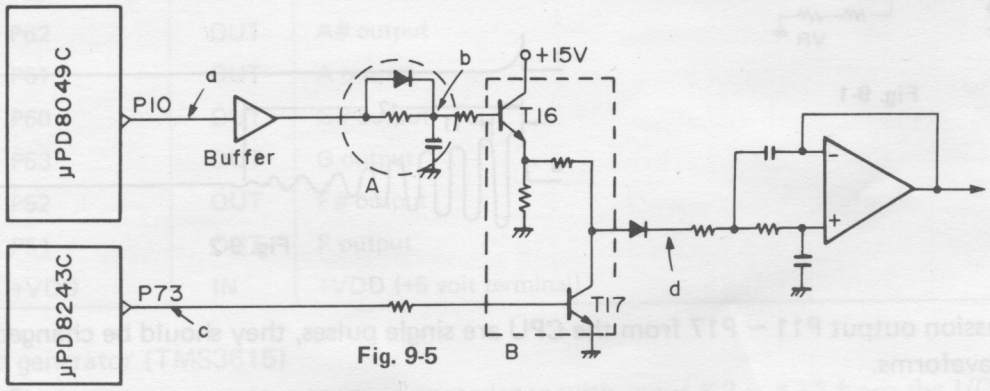

Fig. 9-5

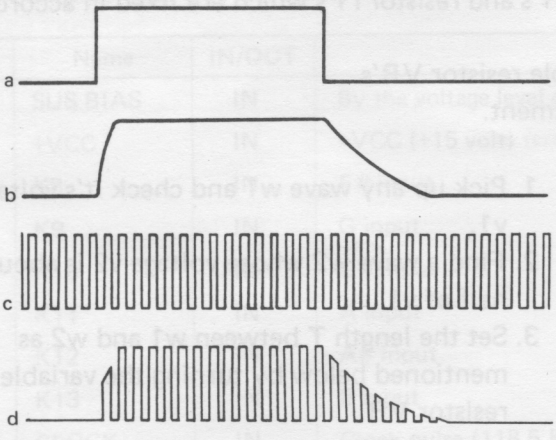

B: Transistor AND gate
mix the signals P10 and P73

a: P10 from CPU
By the length of this signal, length of base sound is choosen.

A: Envelope generator
By charging and discharging of the capacitor c, signal P10 from the CPU is enveloped for making natural sound of base.

c: P73 from I/O Port
Appears frequency (pitch) of base sound.

9-3. (Chord)

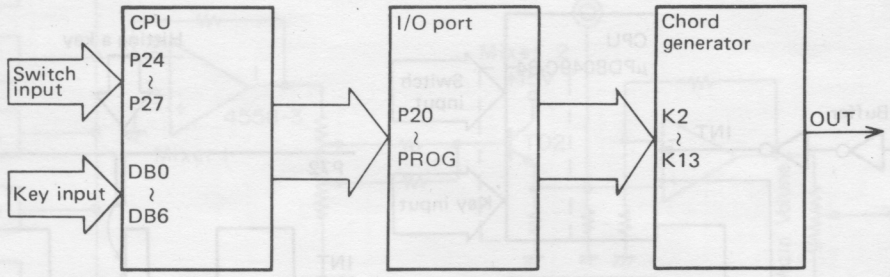

Fig. 9-6

CPU μPD8649-84 is a micro computer consisting of programs for chords and rhythms. In accordance with key input and selected switches, the CPU send 5-bit signals PROG ~ P20, I/O port generates 12-bit output for chord C ~ B.

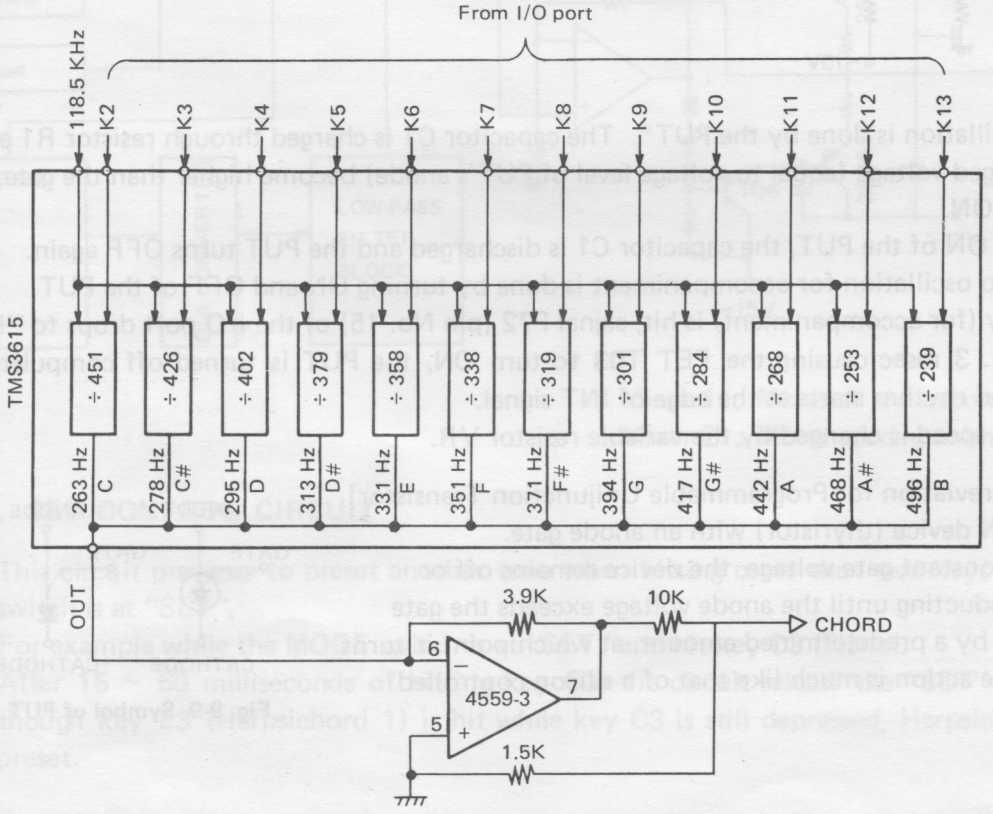

Fig. 9-7

The Chord generator TMS3615 consists 12 dividers which divide the fundamental frequency 118.5 KHz signal into each frequency of chord tone. The output of the chord generator appears as electric current, the OP amp converts the output signal to voltage level.

9-4. (Accompaniment Start Control Circuit)

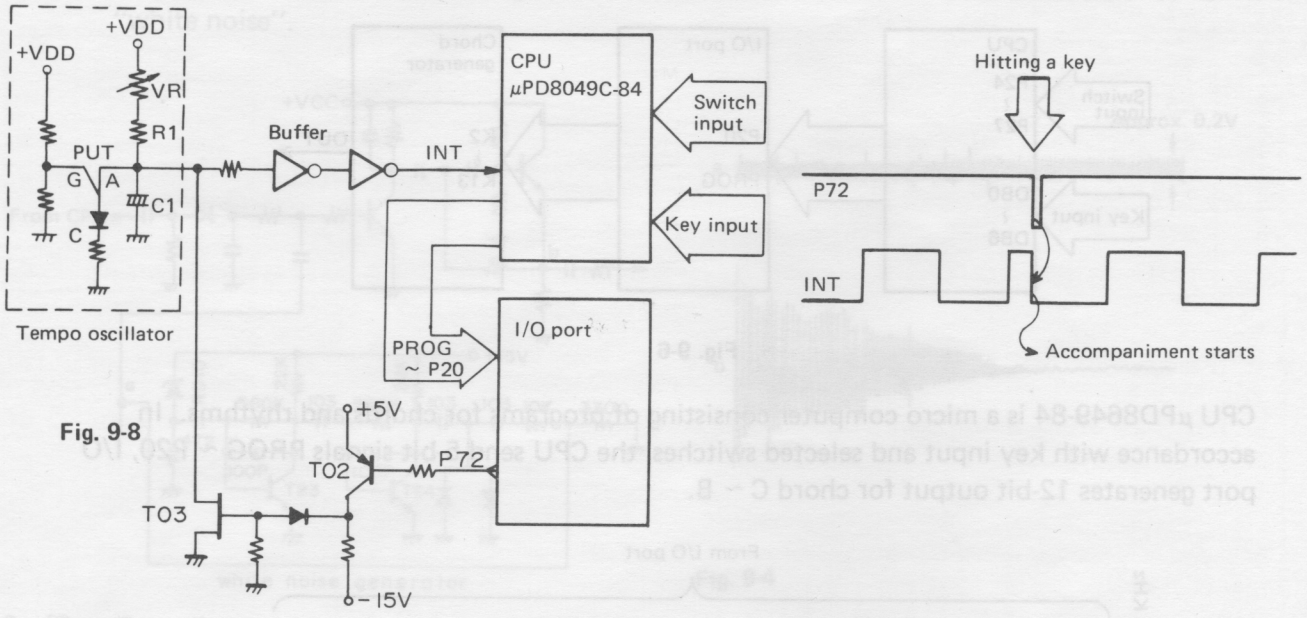

Fig. 9-8

Tempo oscillation is done by the PUT*. The capacitor C1 is charged through resistor R1 and VR and if charged voltage (equal to voltage level of PUT's anode) become higher than the gate, the PUT turns ON.

By turning ON of the PUT, the capacitor C1 is discharged and the PUT turns OFF again.

Thus tempo oscillation for accompaniment is done by turning ON and OFF of the PUT.

When a key (for accompaniment) is hit, signal P72 (pin No. 15) of the I/O port drops to "L" level for approx. 3 msec causing the FET T03 to turn ON, the PUT is turned off compulsorily.

The selected rhythm starts at the edge of INT signal.

The tempo speed is changed by the variable resistor VR.

*PUT [abbreviation for Programmable Unijunction Transistor]
A PNPN device (thyristor) with an anode gate.
For a constant gate voltage, the device remains off or nonconducting until the anode voltage exceeds the gate voltage by a predetermined amount, at which point it turns on. The action is much like that of a silicon controlled switch.

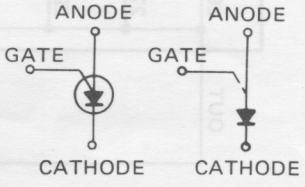

Fig. 9-9 Symbol of PUT

10. (MIXING CIRCUIT)

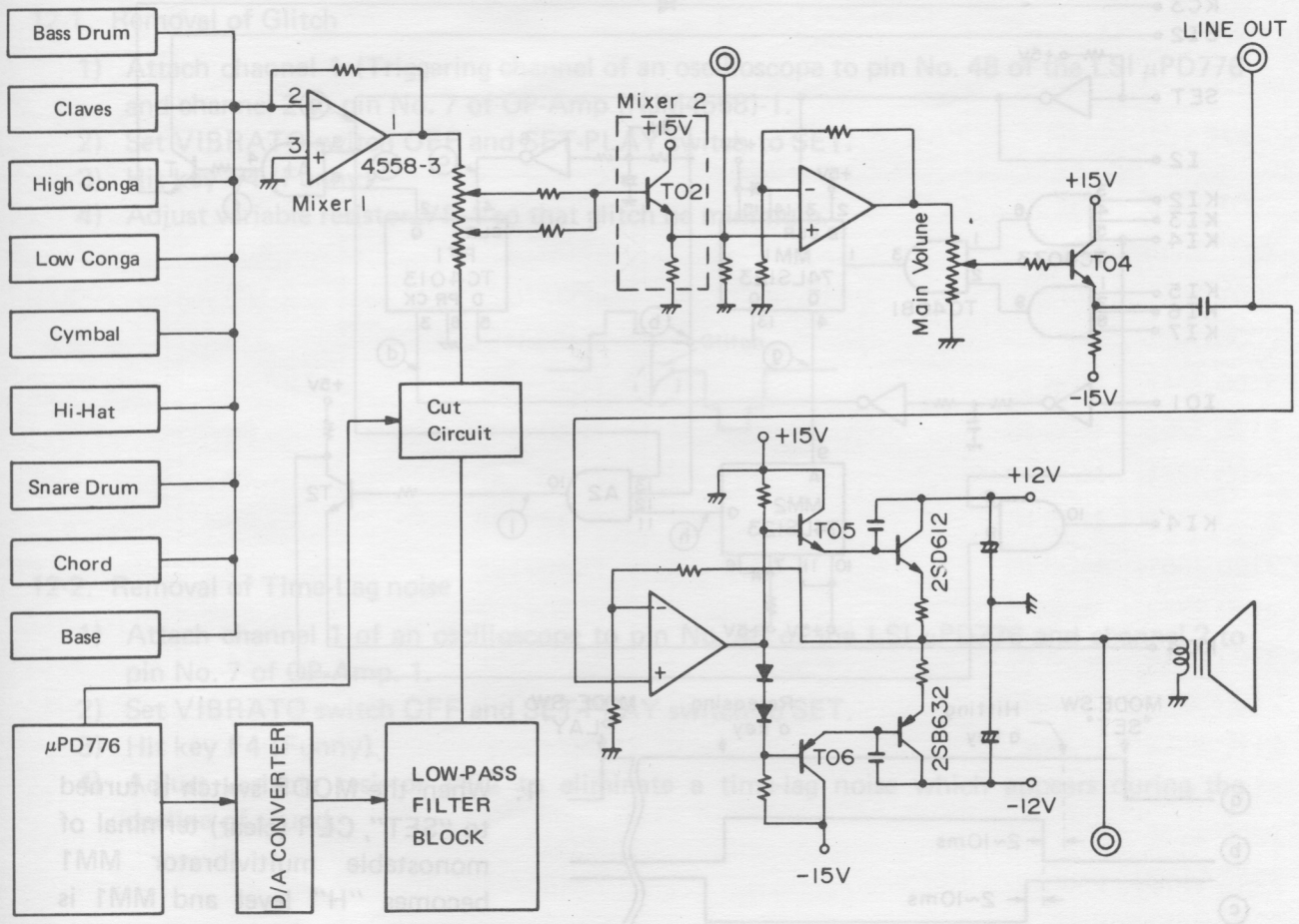

Mixer 1 ; Mixes all the accompaniment
Mixer 2 ; Mixes accompaniment and melody

11. SET CONTROL CIRCUIT

This circuit prevents to preset another tone when hitting more than two keys while the MODE switch is at "SET".
For example while the MODE switch is at "SET" and hit key C3 (Piano).
After 15 ~ 50 milliseconds of hitting key C3, the circuit release the "SET" status. Therefore though key E3 (Harpsichord 1) is hit while key C3 is still depressed, Harpsichord 1 cannot be preset.

NOTE: This circuit is employed only in the initial lot of Casioton 403. Late produced 403 enclose the circuit within the LSI.

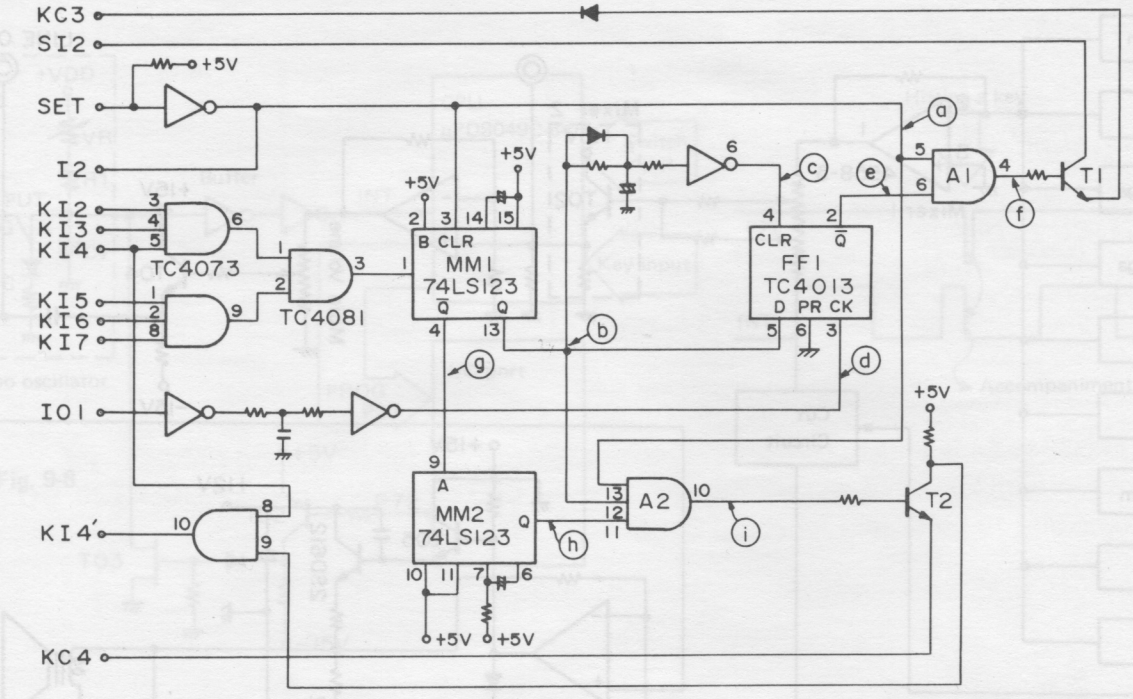

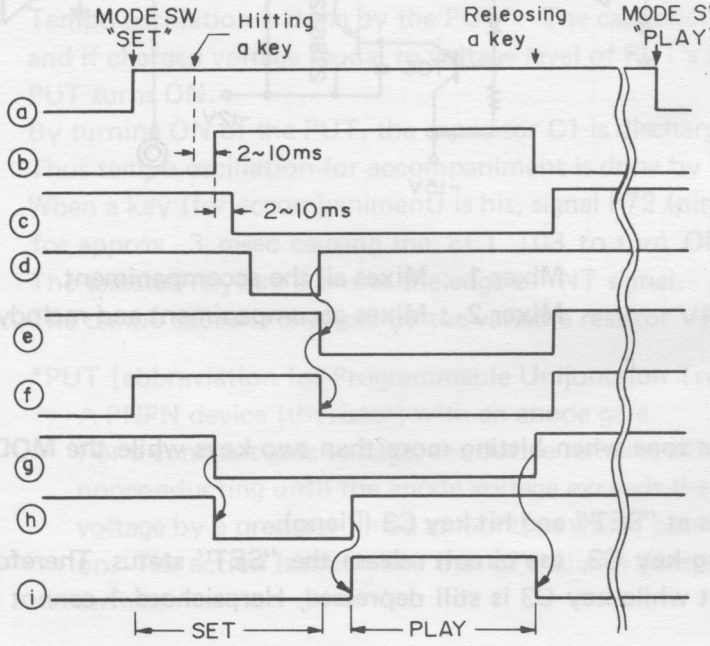

1. When the MODE switch is turned to "SET", CLR (clear) terminal of monostable multivibrator MM1 becomes "H" level and MM1 is reset.
2. Q output of MM1 becomes "L" level causing the flip flop FF1 to reset through CLR terminal.
3. Gate A1 opens causing the transistor T1 to turn on. SI2 terminal of the LSI receives signal KC3 and the LSI becomes presetable.
4. At this time if one of tone selection key (C3 ~ C5) is hit, MM1 is set with a delay (2 ~ 10 milliseconds) by signal KI2 ~ KI7.
5. By $\overline{Q}$ output of MM1, MM2 also set with 2 ~ 10 ms delay and Q output of MM2 opens the gate A2 causing the transistor T2 to turn on.
6. Key common signal KC4 enters into KI4 terminal of the LSI and the LSI generates output signal of the selected tone with A2 pitch.
7. MM1's Q output set the FF1 causing the gate A1 to close and T1 is turned off.
8. By turning off of the T1, signal KC3 does not enter to LSI's SI2 terminal any more. The LSI becomes non-presetable state and become the same status as "PLAY" compulsorily.
9. Therefore any key is hit after then (the first key is still depressed), another tone cannot be preset..

12. ADJUSTMENT

12-1. Removal of Glitch

1) Attach channel 1 (Triggering channel of an oscilloscope to pin No. 48 of the LSI μPD776 and channel 2 to pin No. 7 of OP-Amp (NJM4558)-1.
2) Set VIBRATO switch OFF and SET-PLAY switch to SET.
3) Hit key F4 (Funny)
4) Adjust variable resistor VR-1 so that glitch be minimum.

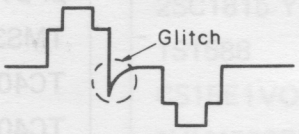

12-2. Removal of Time-Lag noise

1) Attach channel 1 of an oscilloscope to pin No. 48 of the LSI μPD776 and channel 2 to pin No. 7 of OP-Amp. 1.
2) Set VIBRATO switch OFF and SET-PLAY switch to SET.
3) Hit key F4 (Funny)
4) Adjust variable resistor VR2 to eliminate a time-lag noise which appears during the decline of sound.

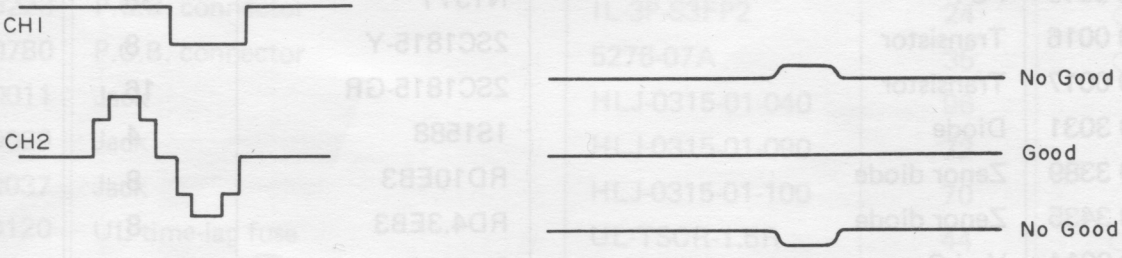

13. PARTS LIST

MODEL 403

Main P.C. Board

CODE NO.	PARTS NAME	SPECIFICATION	UNIT PRICE (¥)	NEWLY EMPLOYED
2001 1378	LSI	μPD8049C-84	1,800	
2001 1386	LSI	μPD8243C	600	
2001 1661	LSI	μPD776G	2,160	○
2005 0896	LSI	TMS3615 25NS	432	○
2100 3247	MOS IC	TC4050BP	60	
2100 3255	MOS IC	TC4049BP	60	
2100 3271	MOS IC	TC4001BP	48	
2100 3310	MOS IC	TC4013BP	96	
2100 3361	MOS IC	TC4071BP	48	
2100 3379	MOS IC	TC4081BP	48	
2100 3549	MOS IC	TC4066BP	114	
2100 3859	C-MOS IC	TC4510BP	240	
2110 3314	Bipolar IC	SN7406N	120	
2121 0013	OP amp.	NJM4558DD	78	
2200 3534	Transistor	2SA1015 (Y)	10	
2240 5110	FET	2SK30A-TM-GR	42	
2240 6019	PUT	N13T1	36	
2280 0016	Transistor	2SC1815-Y	8	
2280 0017	Transistor	2SC1815-GR	16	
2300 3031	Diode	1S1588	4	
2310 3389	Zenor diode	RD10EB3	8	
2210 3435	Zenor diode	RD4.3EB3	8	
2340 0014	Vari-Cap	SVC202	41	
2760 2011	Semi fixed resistor	V8K4-1B500	14	
2760 2029	Semi fixed resistor	V8K4-1B10K	14	
2890 1038	Tantalum capacitor	CS15E1VOR1M1S	14	
2890 4363	Tantalum capacitor	CS15E1VR22M1S	19	
3060 6019	Resistive ladder network	FXK-S10L0025C	432	
3500 3053	P.C. Board connector	IL-E 20P-S3T2	5	
3500 3215	P.C.B. connector	IL-4P-S3EN2	16	○
3500 7016	P.C.B. connector	5229-16CPB	47	
3510 2566	P.C.B. connector	5277-04A	20	
38410024	Coil	R12-5606X	32	

P.C. Board M425-MA2

CODE NO.	PARTS NAME	SPECIFICATION	UNIT PRICE (¥)	NEWLY EMPLOYED
2100 3255	MOS IC	TC4049BP	60	
2100 3310	MOS IC	TC4013BP	96	
2100 3379	MOS IC	TC4081BP	48	
2100 3565	MOS IC	TC4073BP	48	
2111 2585	Bipolar IC	SN74LS123N	173	
2280 0016	Transistor	2SC1815-Y	8	
2300 3031	Diode	1S1588	4	
2890 1038	Tantalum capacitor	CS15E1VOR1M1S	14	
2121 0013	OP amp.	NJM4558DD	78	
2200 3534	Transistor	2SA1015 (Y)	78	○
2210 5051	Transistor	2SB632K-E	38	○
2230 3333	Transistor	2SD612K-E	37	
2240 5110	FET	2SK30A-TM-GR	42	
2280 0016	Transistor	2SC1815-Y	8	
2300 3031	Diode	1S1588	4	
2310 3389	Zenor diode	RD10EB3	8	
2710 2816	Wire wound resistor	ERF-2AK1RO	20	○
2770 6436	Variable resistor	VM60-10KK	54	
3500 3193	P.C.B. connector	IL-8P-S3FP2	35	○
3500 3223	P.C.B. connector	IL-3P-S3FP2	24	○
3511 0780	P.C.B. connector	5276-07A	35	○
3612 0011	Jack	HLJ-0315-01-040	96	
3612 0029	Jack	HLJ-0315-01-090	72	
3612 0037	Jack	HLJ-0315-01-100	70	
3631 0120	UL time-lag fuse	UL-TSCR-1.6R	44	○
6900 8170	Connector B ass'y	M4439*1	92	○

P.C. Board M425-PS1

2120 8647	Monolythic IC	μPC78M15H	154	
2200 3534	Transistor	2SA1015 (Y)	10	
2210 5051	Transistor	2SB632K-E	38	○
2230 3244	Transistor	2SD612E	37	○
2300 3031	Diode	1S1588	4	
2300 9102	Diode	S2VB10	68	

CODE NO.	PARTS NAME	SPECIFICATION	UNIT PRICE (¥)	NEWLY EMPLOYED
2310 3303	Zenor diode	RD5.6EB3	11	
2310 3583	Zenor diode	RD16EB2	8	○
2330 1091	Diode	SIRBA20	40	
2710 2808	Wire wound resistor	ERF-2AK7R5	20	
2890 4401	Tantalum capacitor	CS15E1VR33M1S	28	○
3020 2104	Noise filter	TF2317C-601Y2R5	114	
3600 1186	Voltage selector	ESE-371	84	
3630 2925	UL time-lag fuse	ST4-0.63A	32	
3640 2314	Fuse clip	UF-0017	4	

P.C. Board M425-CNA

2300 3031	Diode	1S1588	4	
6900 8420	P.C. joiner	M4449-1	12	○

P.C. Board M425-CN6

3470 1164	Keyboard switch	R56-9123	23	

FIG. NO.	CODE NO.	PARTS NAME	SPECIFICATION	UNIT PRICE (¥)	NEWLY EMPLOYED
1	6900 9211	Upper case (Wood)	M2308*1	1,692	○
	6900 9241	Upper case (Black)	M2308*2	1,620	○
2	6900 9101	Lower case	M2306A*1	3,008	○
3	6900 8284	Key spacer L	M3307D*2	68	○
4	6900 8294	Key spacer R	M3306D*2	68	○
5	4307 0049	PCB M425-KY1	M3461-1	144	○
6	4307 0050	PCB M425-KY2	M2328-1	278	○
7	4307 0051	PCB M425-KY3	M3462-1	152	○
8	6900 9130	Key contact rubber C	M3412-1	64	○
9	6900 9140	Key contact rubber D	M3413-1	74	○
10	6900 6151	P.C. Joiner D	M4301A-2	59	○
11	6900 8610	P.C. Joiner K	M4451-1	3	○
12	6900 1390	P.C. Joiner A	M400033-1	10	
13	3830 3023	Speaker	C085K03C4311	660	○
14	6900 8100	Speaker connector	M4444-1	27	○
15	3000 5066	Power transformer	TE-25-2M1	1,050	○
16	3670 5019	Receptacle	NC-173	64	

FIG. NO.	CODE NO.	PARTS NAME	SPECIFICATION	UNIT PRICE (¥)	NEWLY EMPLOYED
17	6900 9262	Knob A	M3304B-2	14	○
18	6900 9252	Knob B	M3303B-2	15	○
19	6900 4191	Key top L	M3344A-1	9	
20	3440 5255	Power switch	SDF1S	216	○
21	6900 9151	Keyboard chassis	M1256A-1	540	○
22	6900 9290	Key A	M3404-1	38	○
23	6900 9300	Key B, E	M3405-1	32	○
24	6900 9310	Key C, F	M3406-1	32	○
25	6900 9320	Key D	M3407-1	32	○
26	6900 9330	Key G	M3408-1	32	○
27	6900 9340	Key S	M3409-1	38	○
28	6900 9350	Black key	M3410-1	31	○
29	6900 9360	Spring	M4419-1	2	○
30	6900 9160	Guide felt A	M3428-1	23	○
31	6900 9180	Stopper felt A	M3425-1	50	○
32	6900 9190	Stopper felt B	M3431-1	145	○
33	6900 9370	Switch install board	M2302-1	276	○
34	6900 8522	Key top A	M3298B-9	16	○
35	6900 9382	Key top A	M3298B-8	16	○
36	6900 8532	Key top A	M3298B-10	16	○
37	6900 9392	Key top A	M3298B-11	16	○
38	6900 9401	Rhythm button	M3434A-1	13	○
39	6900 9441	Rhythm button	M3434A-5	13	○
40	6900 9421	Rhythm button	M3434A-3	13	○
41	6900 9461	Rhythm button	M3434A-7	13	○
42	6900 9411	Rhythm button	M3434A-2	13	○
43	6900 9451	Rhythm button	M3434A-6	13	○
44	6900 9431	Rhythm button	M3434A-4	13	○
45	6900 9471	Rhythm button	M3434A-8	13	○
46	6900 9481	Tone button	M3308A-16	6	○
47	6900 8540	Lock button	M4423-1	11	○
48	6900 4201	Keytop F	M3328A-1	19	○
49	2320 3111	LED	TLR-206	24	○
50	2320 3138	LED	TLG-206	34	
51	3400 1103	Lever switch	ESL-36258	100	
52	3400 1111	Lever switch	ESL-36259	96	
53	3450 1084	See-saw switch	SMT019T11	80	

FIG. NO.	CODE NO.	PARTS NAME	SPECIFICATION	UNIT PRICE (¥)	NEWLY EMPLOYED
54	3440 5123	Push switch	SUH42V	240	
55	3440 5115	Push switch	SUH83W4	526	
56	3470 1130	Keyboard switch	AKC-2C	20	
57	2770 6479	Variable resistor	GM70A-50KMN	108	
58	2770 6487	Variable resistor	VM10A-1MC	50	
59	2770 6495	Variable resistor	K16110007E-10KB	50	

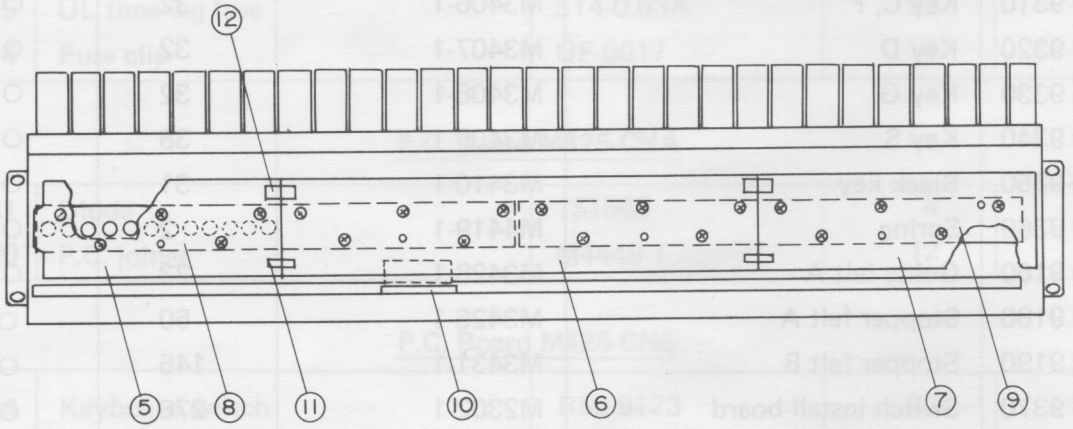

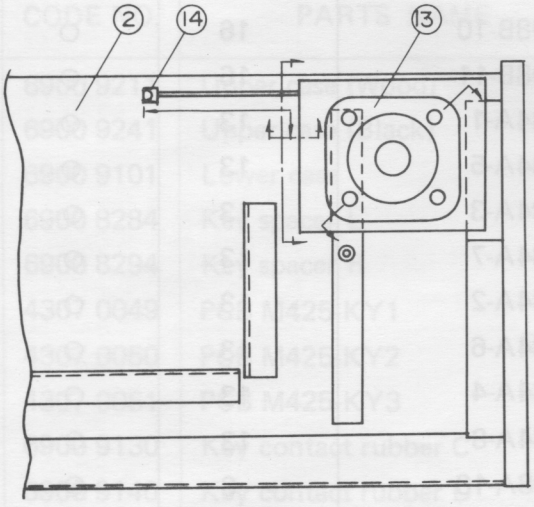

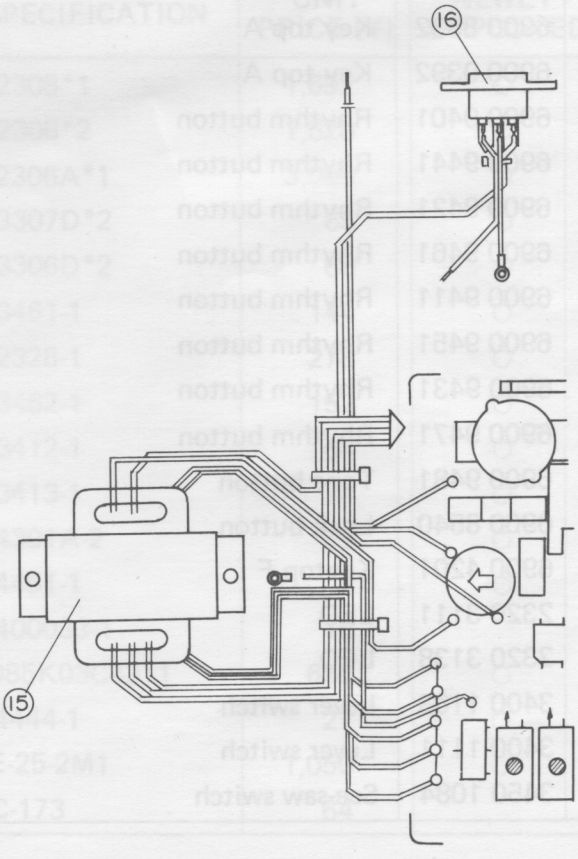

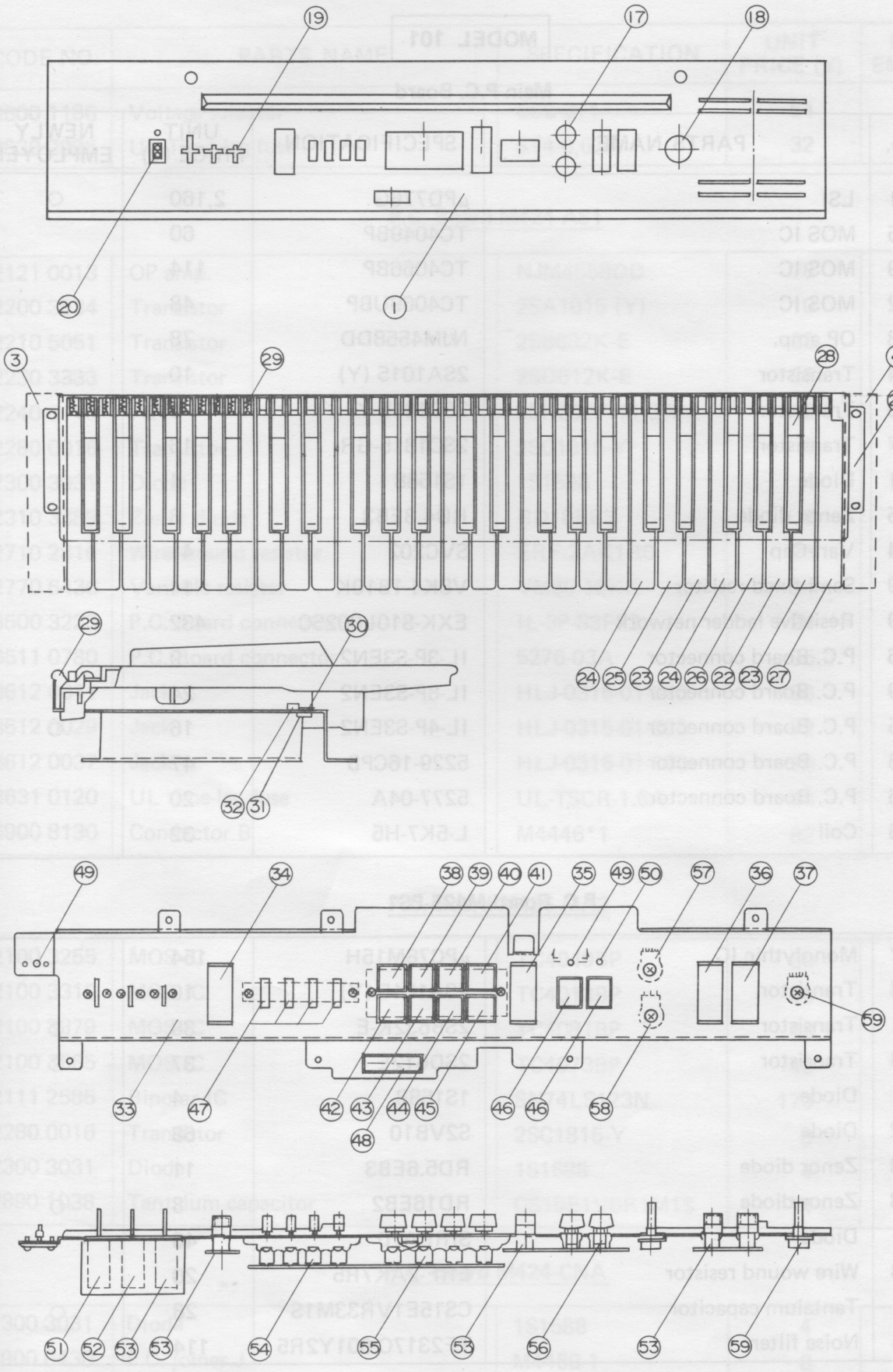
19
17
18
20
1
3
29
28
4
21
24 25 23 24 26 22 23 27
29
30
32 31
49
34
38 39 40 41 35 49 50 57 36 37
59
33 47 42 43 44 45 46 46 58
48
51 52 53 53 54 55 53 56 53 59

MODEL 101

Main P.C. Board

CODE NO.	PARTS NAME	SPECIFICATION	UNIT PRICE (¥)	NEWLY EMPLOYED
2001 1661	LSI	μPD776G	2,160	○
2100 3255	MOS IC	TC4049BP	60	
2100 3549	MOS IC	TC4066BP	114	
2100 3662	MOS IC	TC4069UBP	48	
2121 0013	OP amp.	NJM4558DD	78	
2200 3534	Transistor	2SA1015 (Y)	10	
2280 0016	Transistor	2SC1815-Y	8	
2280 0017	Transistor	2SC1815-GR	16	
2300 3031	Diode	1S1588	4	
2310 3435	Zenor diode	RD4.3EB3	8	
2340 0014	Vari-Cap	SVC202	41	
2760 2029	Semi-fixed resistor	V8K4-1B10K	14	
3060 6019	Resistive ladder network	EXK-S10L0025C	432	
3500 2626	P.C. Board connector	IL-3P-S3EN2	9	
3500 2669	P.C. Board connector	IL-8P-S3EN2	24	
3500 3215	P.C. Board connector	IL-4P-S3EN2	16	○
3500 7016	P.C. Board connector	5229-16CPB	47	
3510 2566	P.C. Board connector	5277-04A	20	
3841 0016	Coil	L-5K7-H5	32	

P.C. Board M425-PS1

2120 8647	Monolythic IC	μPC78M15H	154	
2200 3534	Transistor	2SA1015 (Y)	10	
2210 5051	Transistor	2SB632K-E	38	○
2230 3244	Transistor	2SD612E	37	○
2300 3031	Diode	1S1588	4	
2300 9102	Diode	S2VB10	68	
2310 3303	Zenor diode	RD5.6EB3	11	
2310 3583	Zenor diode	RD16EB2	8	○
2330 1091	Diode	SIRBA20	40	
2710 2808	Wire wound resistor	ERF-2AK7R5	20	
2890 4401	Tantalum capacitor	CS15E1VR33M1S	28	○
3020 2104	Noise filter	TF2317C-601Y2R5	114	

CODE NO.	PARTS NAME	SPECIFICATION	UNIT PRICE (¥)	NEWLY EMPLOYED
3600 1186	Voltage selector	ESE-371	84	
3630 2925	UL Time-lag fuse	ST4-0.63A	32	

P.C. Board M424-AS1

2121 0013	OP amp.	NJM4558DD	78	
2200 3534	Transistor	2SA1015 (Y)	10	
2210 5051	Transistor	2SB632K-E	38	O
2230 3333	Transistor	2SD612K-E	37	
2240 5110	FET	2SK30A-TM-GR	42	
2280 0016	Transistor	2SC1815-Y	8	
2300 3031	Diode	1S1588	4	
2310 3389	Zenor diode	RD10EB3	8	
2710 2816	Wire wound resistor	ERF-2AK1R0	20	O
2770 6436	Variable resistor	VM60-10KK	54	
3500 3223	P.C. Board connector	IL-3P-S3FP2	24	O
3511 0780	P.C. Board connector	5276-03A	35	O
3612 0011	Jack	HLJ-0315-01-040	96	
3612 0029	Jack	HLJ-0315-01-090	72	
3612 0037	Jack	HLJ-0315-01-100	70	
3631 0120	UL time-lag fuse	UL-TSCR-1.6A	44	O
6900 8130	Connector B	M4446*1	82	O

P.C. Board M425-MA2

2100 3255	MOS IC	TC4049BP	60	
2100 3310	MOS IC	TC4013BP	96	
2100 3379	MOS IC	TC4081BP	48	
2100 3565	MOS IC	TC4073BP	48	
2111 2585	Bipolar IC	SN74LS123N	173	
2280 0016	Transistor	2SC1815-Y	8	
2300 3031	Diode	1S1588	4	
2890 1038	Tantalum capacitor	CS15E1V0R1M1S	14	

P.C. Board M424-CNA

2300 3031	Diode	1S1588	4	
6900 8430	P.C. joiner J	M4450-1	8	

FIG. NO.	CODE NO.	PART NAME	SPECIFICATION	UNIT PRICE (¥)	NEWLY EMPLOYED
1	6900 8371	Upper case	M2307A*1	1,620	○
2	6900 8301	Lower case	M2305A*1	3,036	○
3	6900 8284	Key spacer L	M3307D*2	68	○
4	6900 8294	Key spacer R	M3306D*2	68	○
5	3830 3023	Speaker	C085K03C4311	660	○
6	6900 8100	Speaker connector	M4444*1	27	○
7	3000 5066	Power transformer	TE-25-2M1	1,050	○
8	3670 5019	Receptacle	NC-173	64	
9	4307 0049	PCB M425-KY1	M3461-1	144	○
10	4307 0050	PCB M425-KY2	M2328-1	278	○
11	4307 0051	PCB M425-KY3	M3462-1	152	○
12	6900 9130	Key contact rubber C	M3412-1	64	○
13	6900 9140	Key contact rubber D	M3413-1	74	○
14	6900 6151	PC joiner D	M4301A-2	59	○
15	6900 8610	PC joiner K	M4451-1	3	○
16	6900 1390	PC joiner A	M400033-1	10	
17	3440 5255	Power switch	SDJ1S	216	○
18	6900 9252	Knob	M3303B-2	15	○
19	6900 9151	Keyboard chassis	M1256A-1	540	○
20	6900 9290	Key A	M3404-1	38	○
21	6900 9300	Key B, E	M3405-1	32	○
22	6900 9310	Key C, F	M3406-1	32	○
23	6900 9320	Key D	M3407-1	32	○
24	6900 9330	Key G	M3408-1	32	○
25	6900 9340	Key S	M3409-1	38	○
26	6900 9350	Black key	M3410-1	31	○
27	6900 9360	Spring	M4419-1	2	○
28	6900 9160	Guide felt A	M3428-1	23	○
29	6900 9180	Stopper felt A	M3425-1	50	○
30	6900 9190	Stopper felt B	M3431-1	145	○
31	6900 8510	Switch install board	M2301-1	178	○
32	6900 8522	Key top A	M3298B-9	16	○
33	6900 8532	Key top A	M3298B-10	16	○
34	6900 9392	Key top A	M3298B-11	16	○
35	6900 8540	Lock button	M4423-1	11	○
36	2320 3111	LED	TLR-206	24	

FIG. NO.	CODE NO.	PART NAME	SPECIFICATION	UNIT PRICE (¥)	NEWLY EMPLOYED
37	2770 6495	Variable resistor	K16110007E-10K	50	
38	3450 1084	See-saw switch	SMT019T11	80	
39	3440 5123	Push switch	SUH42V	240	

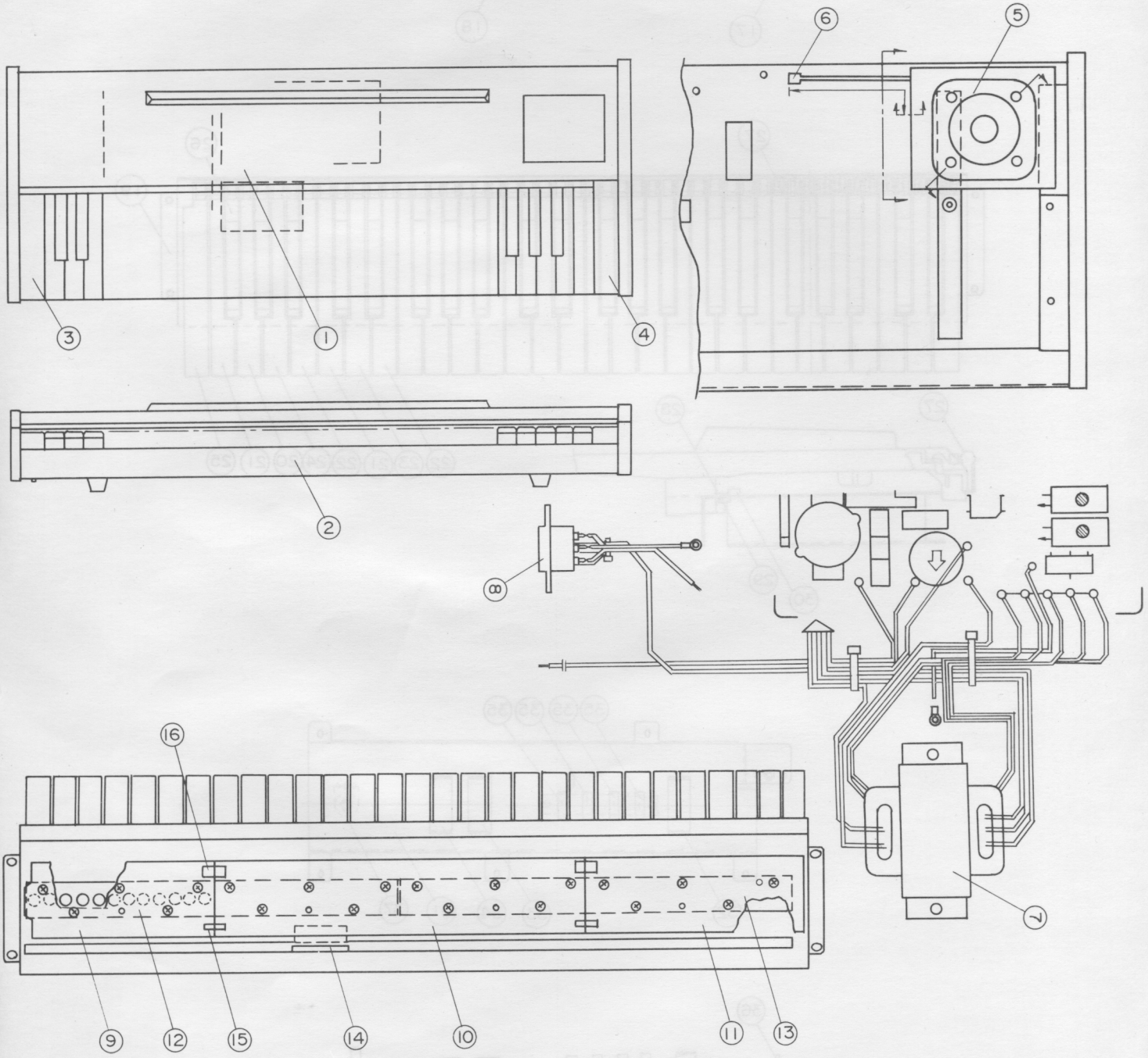

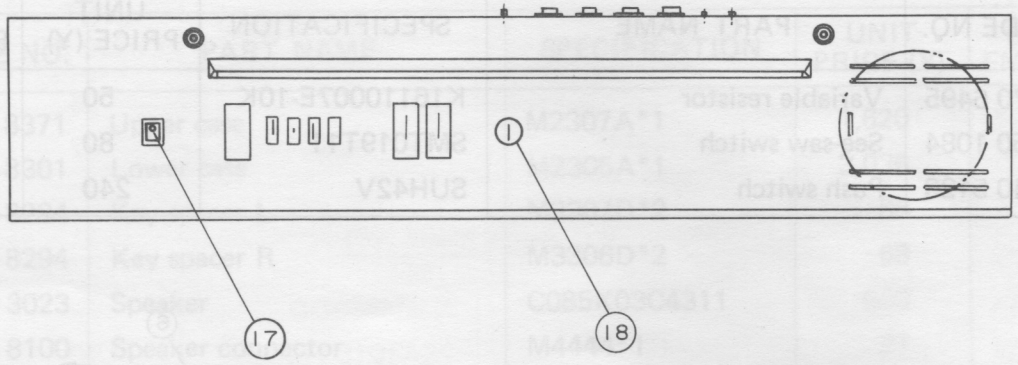
17
18

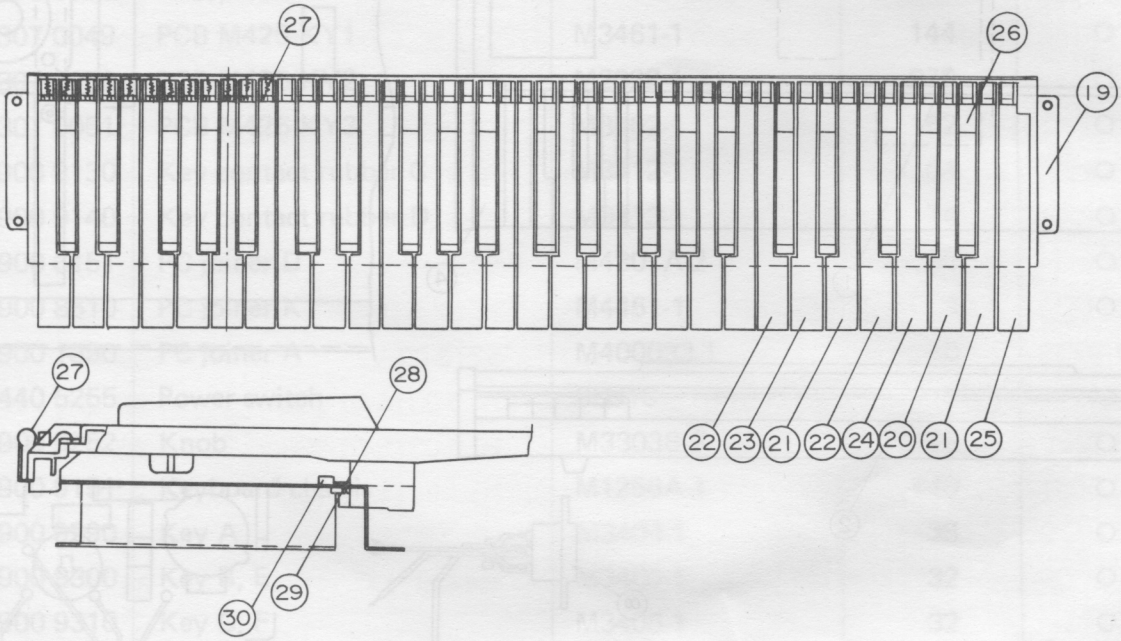
27
26
19
27
28
30
29
22
23
21
22
24
20
21
25

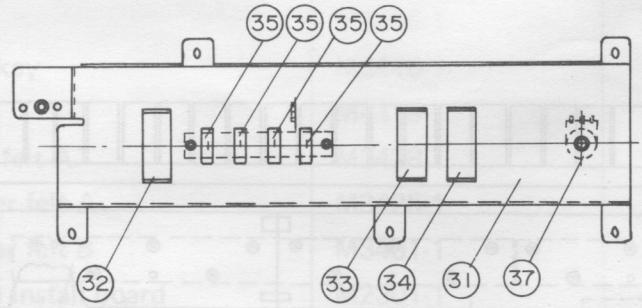
35
35
35
35
32
33
34
31
37

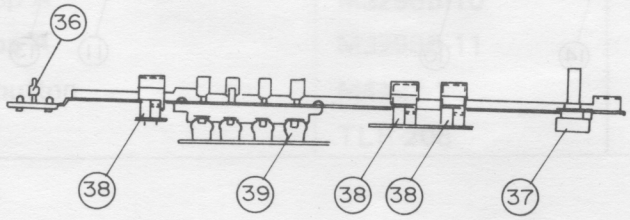
36
38
39
38
38
37

CASIO COMPUTER CO., LTD.

PRINTED IN JAPAN